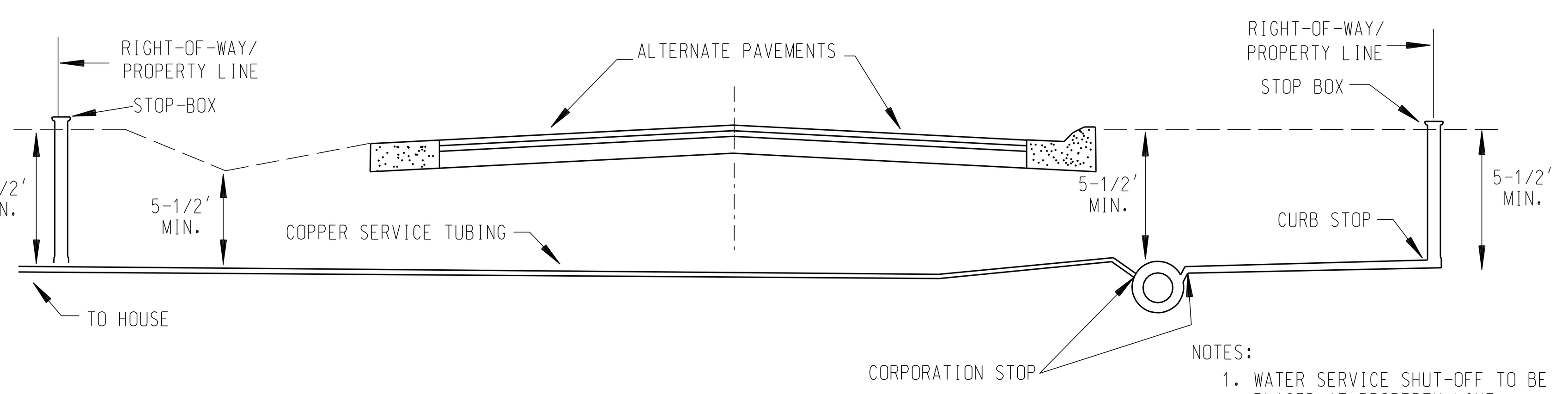

TYPICAL PUBLIC ROAD WATER SERVICE CONNECTION

NO SCALE

NOTES:
1. WATER SERVICE SHUT-OFF TO BE PLACED AT PROPERTY LINE.
2. LATERAL LOCATION SHALL BE AS REQUESTED BY THE ABUTTING PROPERTY OWNER.

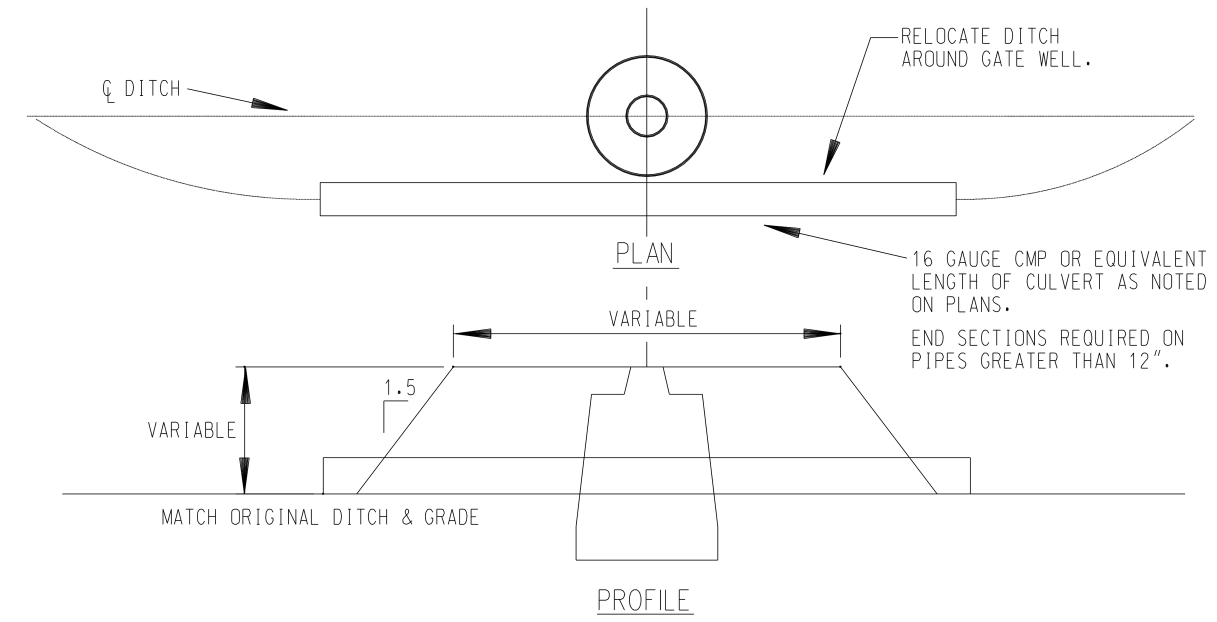

DITCH ENCLOSURE AT GATE WELL

NO SCALE

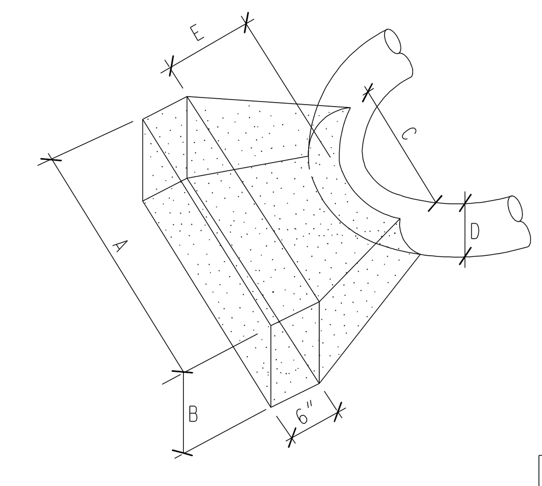

FOR 90° BENDS OR SMALLER

D	A	B	C	E MIN.
20"	8'	6.5'	3.5'	2.5'
16"	6'	4'	2.5'	2'
12"	4'	3'	2'	1.75'
10"	3'	3'	2'	1.75'
8"	3'	2'	2'	1.5'
6"	2'	1.5'	2'	1.25'

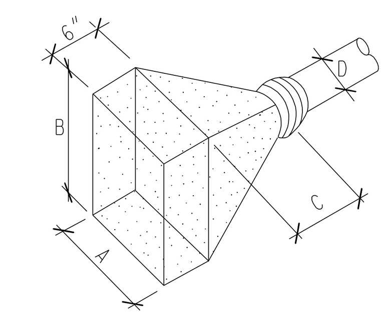

FOR PLUGS

D	A	B	C MIN.
20"	7'	5'	2.5'
16"	4'-10"	4'-10"	2'
12"	4'-4"	3'	1'-9"
10"	3'	2'	1'-6"
8"	2'-10"	2'-6"	1'-6"
6"	1'-6"	1'-6"	3'

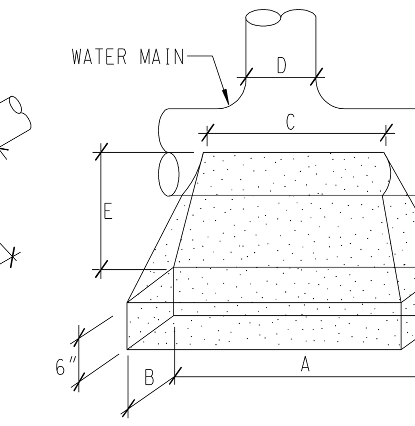

NOTE:
3000 PSI CONCRETE TO BE USED. THRUST BLOCK TO ABUTT & REST AGAINST UNDISTURBED SOIL OR EARTH COMPACTED TO 95% MODIFIED PROCTOR.

FOR TEES

D	A	B	C	E MIN.
20"	6.5'	4.5'	3.5'	3'
16"	4'-8"	4'-8"	2.5'	2.75'
12"	4'	3'	2.5'	2.5'
10"	3'	2'	2'	2.25'
8"	2'-6"	2'	2'	2.25'
6"	2'	2'	2'	2.25'

THRUST BLOCK DETAILS

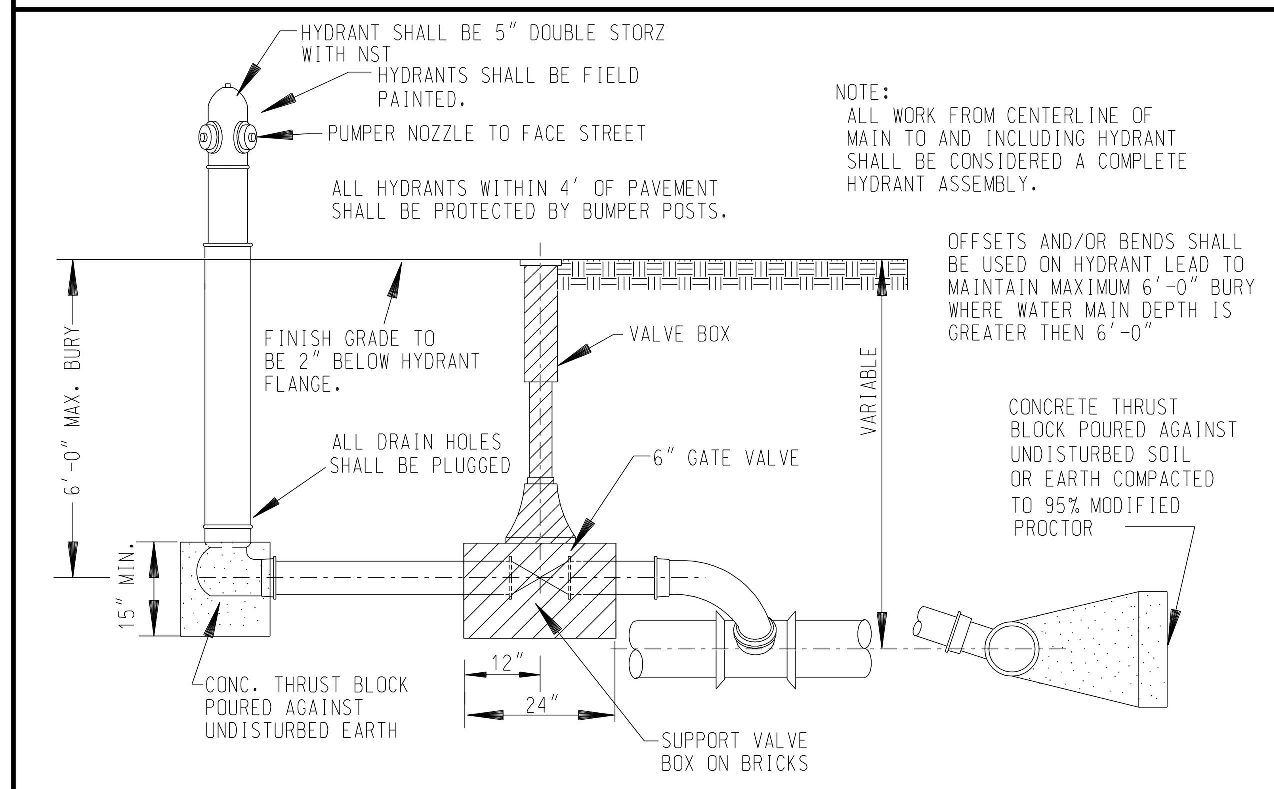

NOTE:
ALL WORK FROM CENTERLINE OF MAIN TO AND INCLUDING HYDRANT SHALL BE CONSIDERED A COMPLETE HYDRANT ASSEMBLY.

SECTION 6" HYDRANT SIDE OUTLET

SCALE 1"= 2'

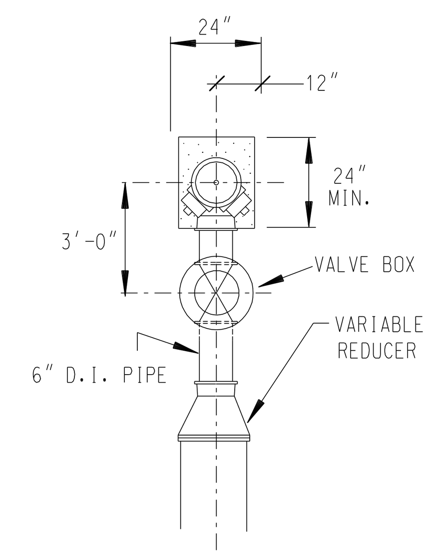

PLAN 6" HYDRANT WATER MAIN END

SCALE 1" = 1'

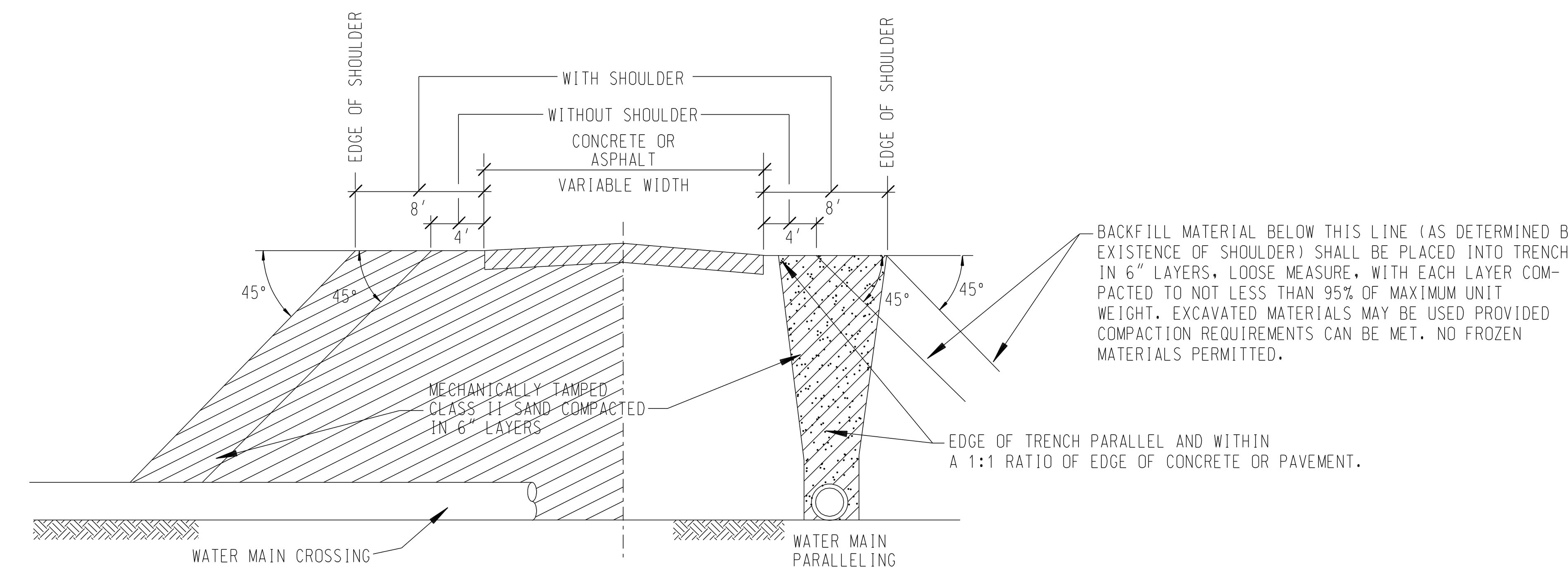

MINIMUM BACKFILL UNDER OR NEAR PAVEMENT

SCALE 1"= 6'

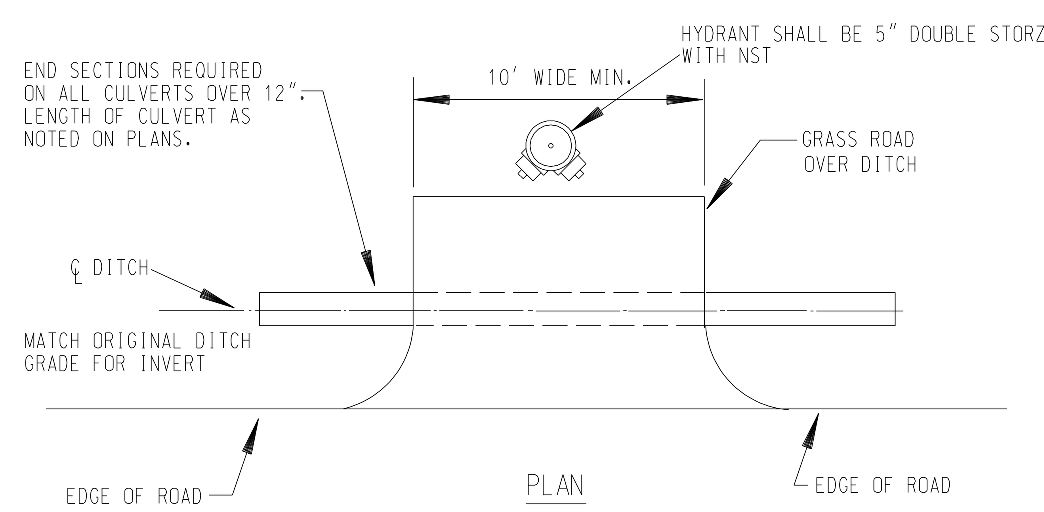

DITCH ENCLOSURE AT HYDRANT

NO SCALE

NOTE:
ALL HYDRANTS TO BE FULLY RESTRAINED BY MECHANICAL JOINTS APPROVED BY ENGINEERS. THRUST BLOCKS ALSO REQUIRED.

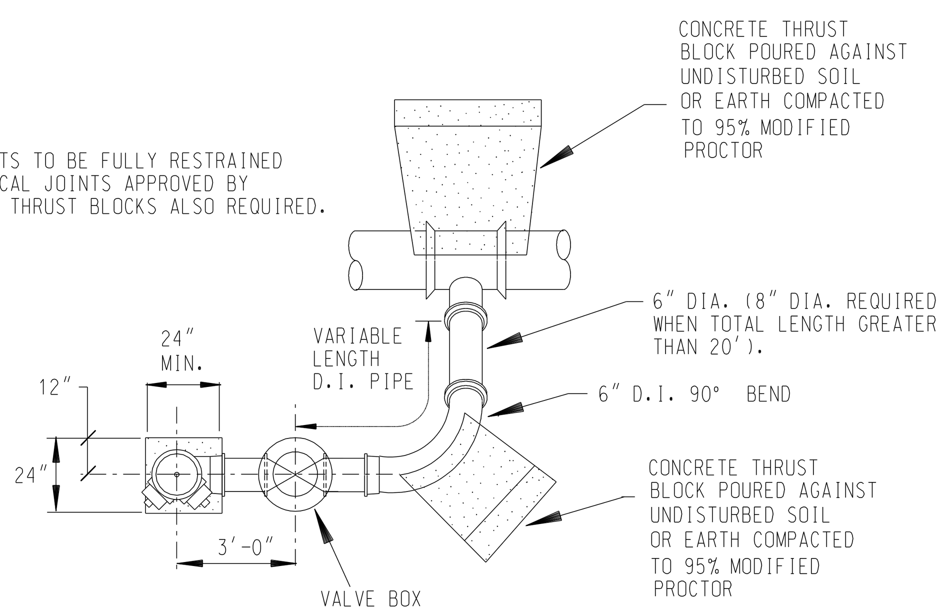

PLAN 6" HYDRANT SIDE OUTLET

SCALE 1" = 1'

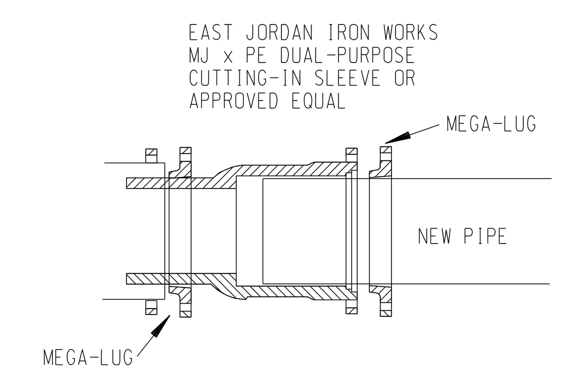

BOTTLE SLEEVE

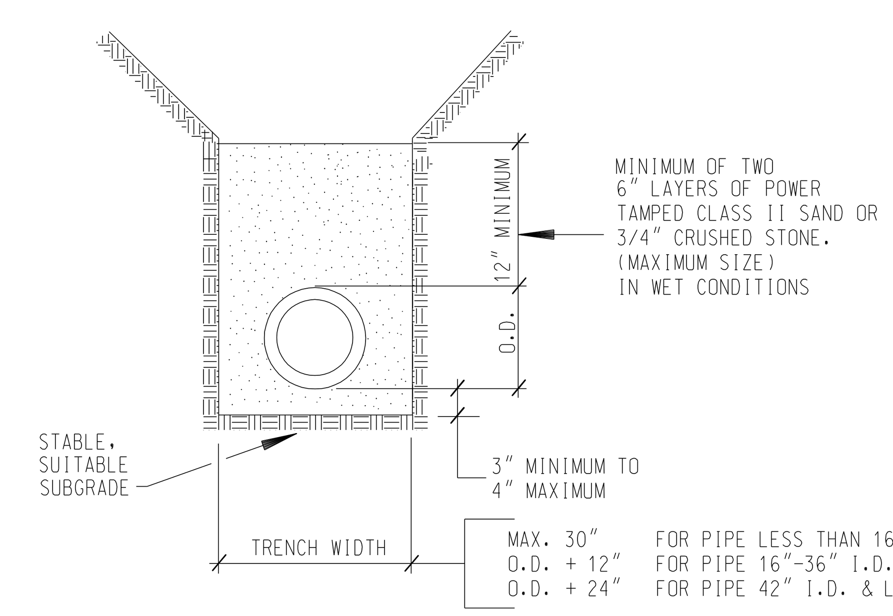

STANDARD BEDDING FOR WATER MAIN

SCALE 1" = 4'

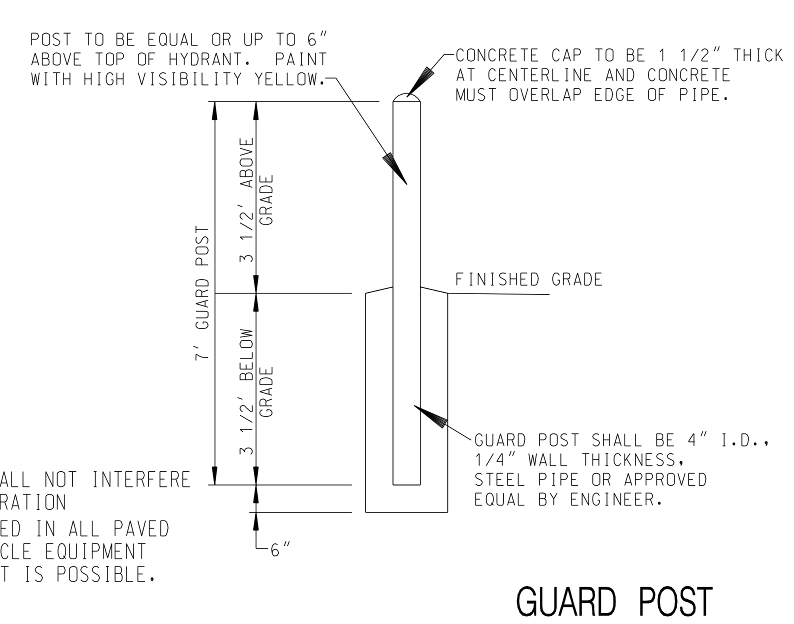

NOTES:
1. GUARD POST SHALL NOT INTERFERE WITH HYDRANT OPERATION
2. TO BE INSTALLED IN ALL PAVED AREAS WHERE VEHICLE EQUIPMENT DAMAGE TO HYDRANT IS POSSIBLE.

GUARD POST

SCALE 1"= 3'

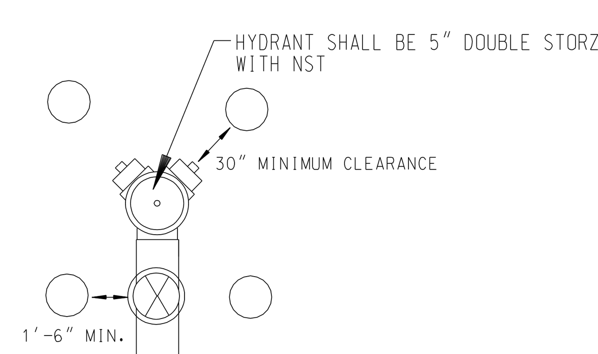

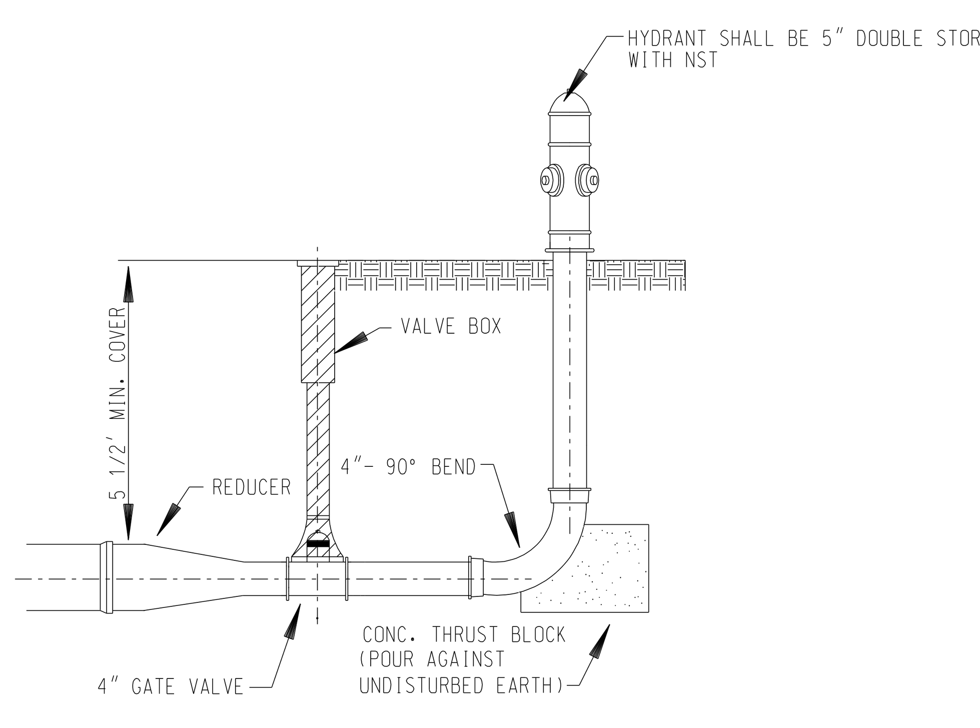

DEAD END BLOWOFF CONNECTION

SCALE 1" = 1'

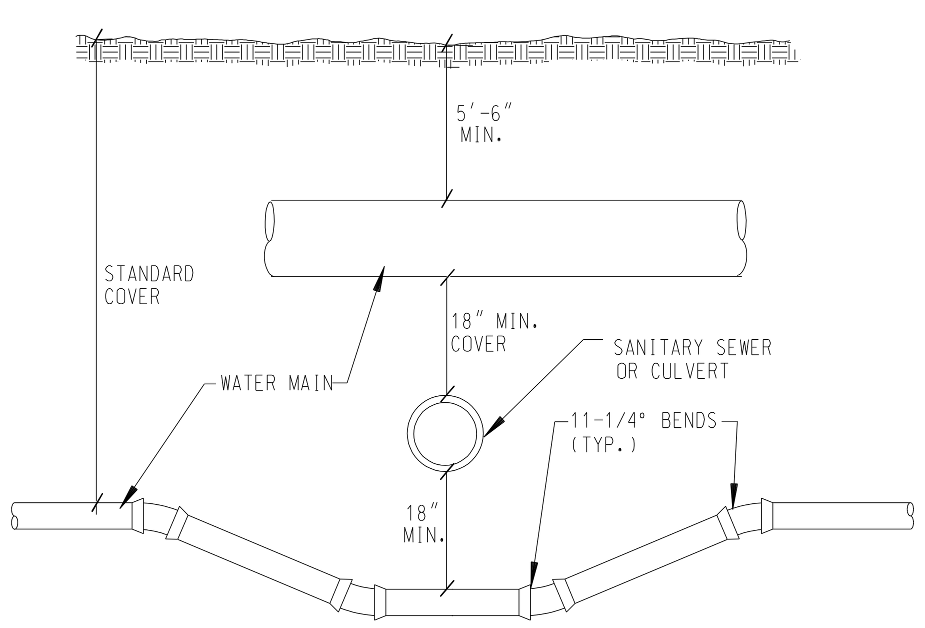

SEWER OR CULVERT CROSSING

SCALE 1"= 2'

HYDRANT & BLOWOFF DETAILS

DATE:	REVISIONS:
8/13/02	DETAILS FINALIZED
9/16/08	HYDRANT DETAIL PER FIRE CHIEF
2/16/12	REVISED PER LYON TWP F.D.

72 HOURS (3 WORKING DAYS) BEFORE YOU DIG CALL MISS DIG 800-482-7171 (TOLL FREE)

PRINCIPAL: LDC
PROJ. MNGR: JDM
DESIGN: GWE
DRAWN: GWE
IND. REVIEW: JDM

CHARTER TOWNSHIP OF LYON
LYON MUNICIPAL CENTER
58000 GRAND RIVER AVENUE
NEW HUDSON, MI 48165
(248)437-2240

Giffels-Webster Engineers, Inc.
ENGINEERS LAND SURVEYORS PLANNERS LANDSCAPE ARCHITECTS
1025 E. MAPLE SUITE 100 BIRMINGHAM, MI 48009
(248) 852-3100

Terms and Conditions for Electronic Data:
This document is provided in electronic format for the referenced project. It is understood and agreed that any use or reuse of original or altered files will be at the user's own risk and legal responsibility. It is also agreed that the electronic files provided by Giffels-Webster Engineers, Inc. (GWE) are being provided for general information purposes only. Neither the electronic files nor any CAD versions are to be relied on for construction layout purposes.
The user expressly indemnifies and holds GWE harmless for any and all claims, suits, liability, demands or other costs arising out of or resulting from the unauthorized use of these materials. GWE makes no representation as to the accuracy of the information provided by the electronic media. Data on electronic media can deteriorate or be modified without the knowledge of GWE.
Electronic media viruses are increasing in complexity and growth. GWE advises all users to scan any disc received from outside sources with a current anti-virus program. It is understood and agreed that GWE will not be responsible for any damage caused by such a virus. If any virus is detected by your system on any media received from GWE it is your responsibility to contact us immediately.

SHEET TITLE:
WATER MAIN STANDARD DETAILS
LYON TOWNSHIP, OAKLAND CO., MI

DATE: 2/16/12
SCALE: AS NOTED
SHEET: W-2
JOB:

Copyright © 2012 Giffels-Webster Engineers, Inc.
No reproduction shall be made without the prior written consent of Giffels-Webster Engineers, Inc.