PUMP HOUSE DETAILS

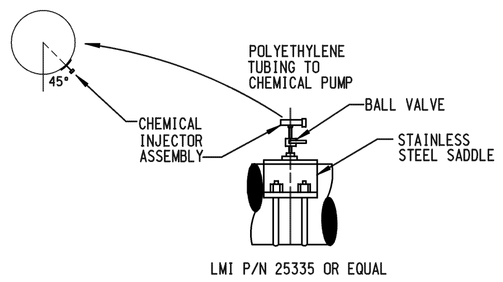

CHEMICAL INJECTOR ASSEMBLY

NOT TO SCALE

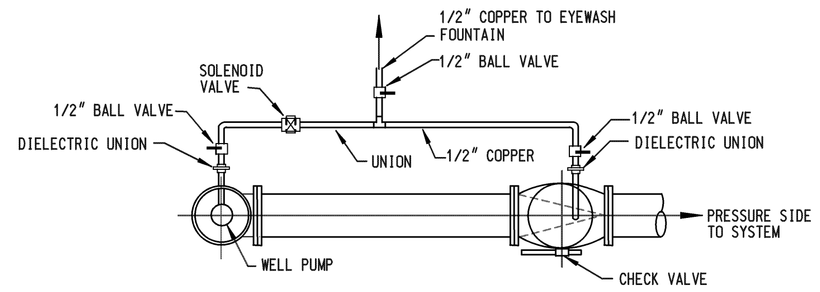

PUMP PRE-LUBE PIPING DETAIL

NOT TO SCALE

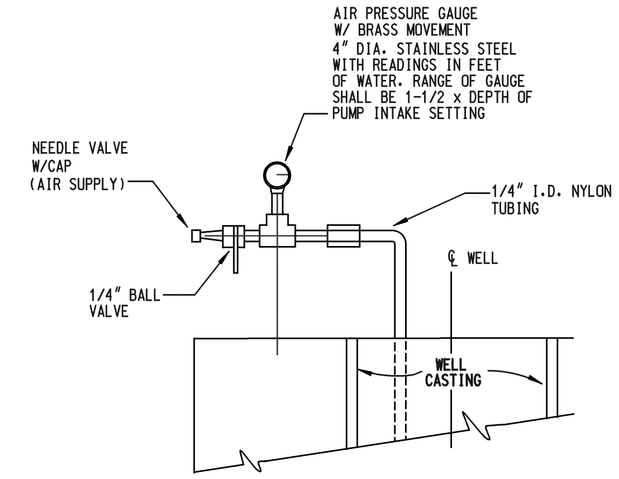

ALTIMETER GAUGE DETAIL

NOT TO SCALE

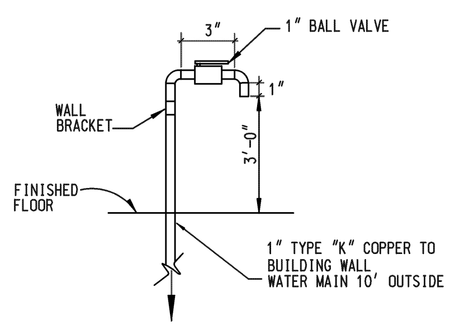

SAMPLE COCK DETAIL-WALL MOUNT

NOT TO SCALE

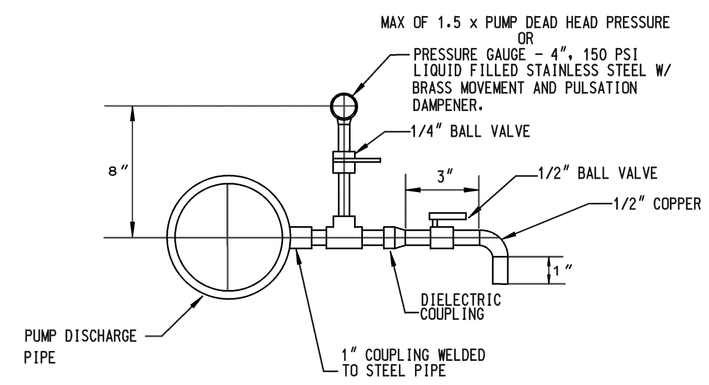

SAMPLE COCK/PRESSURE GAUGE DETAIL

NOT TO SCALE

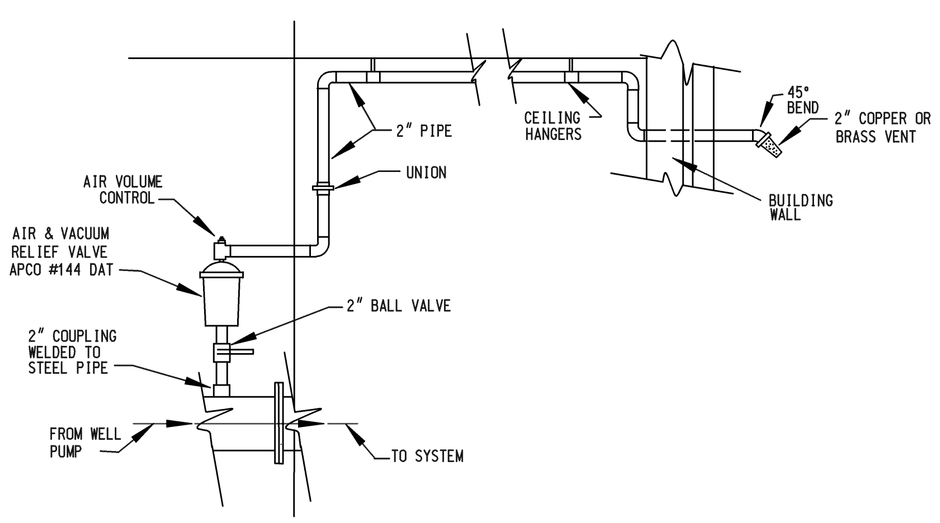

AIR /VACUUM RELEASE VALVE DETAIL

NOT TO SCALE

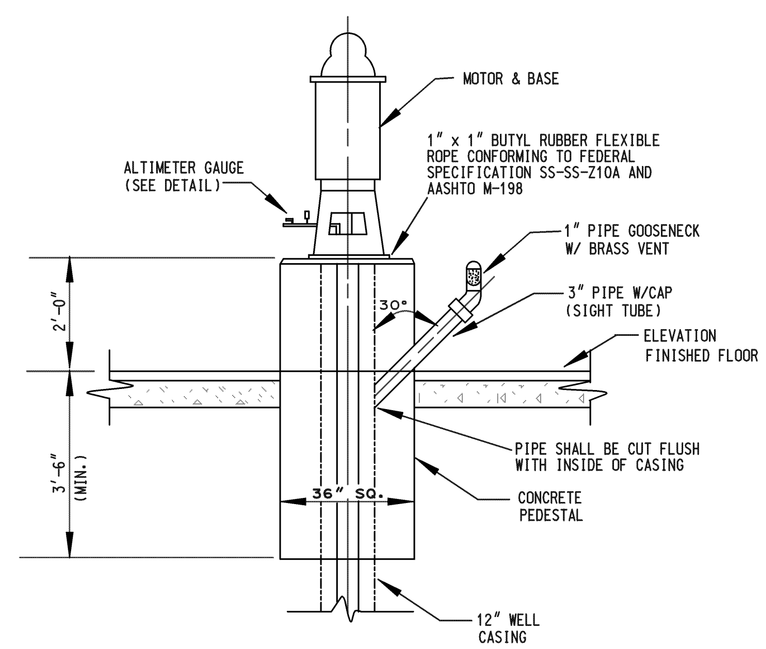

MOTOR PUMP & PEDESTAL DETAIL

NOT TO SCALE

DATE:	REVISIONS:
8/13/02	FINALIZED DETAILS

72 HOURS (3 WORKING DAYS) BEFORE YOU DIG CALL MISS DIG 800-482-7171 (TOLL FREE)

PRINCIPAL: LDC
PROJ. MNGR: TAB
DESIGN: GWE
DRAWN: GWE
IND. REVIEW: GWE

CHARTER TOWNSHIP OF LYON
LYON MUNICIPAL CENTER
58000 GRAND RIVER AVENUE
NEW HUDSON, MI 48165
(248)437-2240

Giffels-Webster Engineers, Inc.
ENGINEERS LAND SURVEYORS PLANNERS LANDSCAPE ARCHITECTS
2871 BOND STREET ROCHESTER HILLS, MI 48309
(248) 852-3100

Terms and Conditions for Electronic Data:

This document is provided in electronic format for the referenced project. It is the responsibility of the recipient to verify the accuracy of the information provided at the time of use and keep up-to-date. It is agreed that the electronic files provided by Giffels-Webster Engineers, Inc. (GWE) are being provided for reference purposes only and are not to be used for construction purposes. Electronic versions are to be relied on for construction bond purposes.

GWE makes no warranties, express or implied, including without limitation, and all claims, suits, liability, demands or other costs arising out of or resulting from, the accuracy of the information provided by the electronic media. Data in electronic media may be altered, intentionally or unintentionally, due to transmission or storage. Electronic media viruses are increasing in complexity and growth. GWE advises all users to use virus detection software and scan all electronic media before loading data onto any system. GWE assumes no responsibility for any damage caused by such a virus. If any virus is detected by your system or any other system, GWE must be notified immediately. Any modification or any other use of data received from GWE is your responsibility, to remove and remediate.

SHEET TITLE:
WATER MAIN
PUMP HOUSE DETAILS
LYON TOWNSHIP, OAKLAND CO., MI

DATE: 9/01/99
SCALE: AS NOTED
SHEET: 1 OF 1
JOB:

Copyright © 2003 Giffels-Webster Engineers, Inc.
No reproduction shall be made without the prior written consent of Giffels-Webster Engineers, Inc.