GENERAL NOTES

1. ALL WORKMANSHIP AND MATERIALS SHALL BE IN ACCORDANCE WITH THE CURRENT STANDARDS AND SPECIFICATIONS OF LYON TOWNSHIP.

2. IT SHALL BE THE CONTRACTOR'S RESPONSIBILITY TO VERIFY THE EXISTENCE AND LOCATION OF ALL UNDERGROUND UTILITIES PRIOR TO CONSTRUCTION.

3. TYPE AND CLASS OF PIPE SHALL BE AS SPECIFIED ON PLANS.

4. ALL STORM SEWER SHALL BE INSTALLED ON CLASS "B" BEDDING, OR BETTER.

5. ALL TRENCHES UNDER OR WITHIN A 1:1 INFLUENCE OF EXISTING OR PROPOSED PAVEMENT OR DRIVEWAYS SHALL BE BACKFILLED WITH THOROUGHLY COMPACTED SAND TO GRADE (95% MAXIMUM UNIT DENSITY).

6. ALL STRUCTURES FOUR (4) FEET AND LARGER INSIDE DIAMETER SHALL HAVE ECCENTRIC CONES.

7. ALL END SECTIONS 18" IN DIAMETER AND LARGER SHALL BE PROVIDED WITH A GALVANIZED BAR SCREEN.

8. PROVIDE SIX (6) INCH CMP UNDERDRAINS UNDER ROAD BETWEEN ALL INLETS AND CATCH BASINS PER ROAD COMMISSION FOR OAKLAND COUNTY STANDARDS, MINIMUM SLOPE 0.50%.

9. PROVIDE SIX (6) INCH CMP EDGEDRAINS AS REQUIRED BY ROAD COMMISSION FOR OAKLAND COUNTY.

10. STRUCTURES SHALL HAVE THE FOLLOWING MICHIGAN DEPARTMENT OF TRANSPORTATION FRAMES AND COVERS:

- MANHOLES .... TYPE "A" PERFORATED
- INLETS & CATCH BASINS IN CURB & GUTTER .... TYPE "K" - EJIW 7045
- INLETS & CATCH BASINS IN VALLEY GUTTER OR PARKING LOTS .... TYPE "D" - EJIW 5105
- REAR YARD CATCH BASINS .... TYPE "E" - EJIW 6508

11. MANHOLES SHALL BE CONSTRUCTED OF CONCRETE BLOCK OR PRE-CAST REINFORCED CONCRETE SECTIONS IN ACCORDANCE WITH THE TOWNSHIP'S STANDARD DETAILS.

12. PRE-CAST REINFORCED CONCRETE MANHOLE SECTIONS SHALL CONFORM TO THE REQUIREMENTS OF ASTM "TENTATIVE SPECIFICATIONS FOR PRE-CAST REINFORCED CONCRETE MANHOLE RISERS AND TOPS", ASTM DESIGNATION C478.

13. MANHOLE STEPS SHALL BE PLASTIC COATED STEEL MEETING THE REQUIREMENTS OF ASTM D2146, TYPE II, GRADE 49108, MA INDUSTRIES P.S.I. POLYPROPYLENE, OR APPROVED EQUAL.

14. CATCH BASINS SHALL BE CONSTRUCED OF BRICK, PRE-CAST MANHOLE BLOCKS, OR PRE-CAST REINFORCED CONCRETE MANHOLE SECTIONS IN ACCORDANCE WITH THE TOWNSHIP'S STANDARD DETAILS.

15. PAVEMENT CATCH BASINS AND INLET FRAMES AND GRATES SHALL BE IN ACCORDANCE WITH LYON TOWNSHIP SPECIFICATIONS.

STORM DRAIN MATERIAL NOTES

1. CORRUGATED STEEL PIPE:

- CORRUGATED STEEL PIPE SHALL BE USED FOR UNDERGROUND DETENTION IN PARKING LOTS, AND UNDER DRIVES WHEN USING AN OPEN DITCH SYSTEM.
- CORRUGATED STEEL PIPE SHALL CONFORM TO AASHTO M36, TYPE I.
- CORRUGATED STEEL PIPE SHALL BE PROVIDED CORRESPONDING TO THE DIAMETER OR ARCH SHAPE (RISE AND SPAN) AS SPECIFIED ON THE PLANS.
- GAUGE THICKNESS SHALL BE AS SPECIFIED ON THE PLANS.
- A PAVED INVERT SHALL BE PROVIDED IF SPECIFIED ON THE PLANS.
- ALL CORRUGATED STEEL PIPE SHALL BE GALVANIZED AND COATED WITH BITUMINOUS ASPHALT TO RETARD CORROSION. AS AN ALTERNATE TO THIS REQUIREMENT, AN ALUMINZED STEEL PIPE, OR APPORVED EQUAL, MAY BE SUBSTITUTED.
- ALL CORRUGTED STEEL PIPE SHALL BE JOINED TOGETHER WITH A WATERTIGHT CIRCUMFERENTIALLY CORRUGATED STEEL COUPLING BAND FURNISHED WITH TWO (2) RUBBER GASKETS.
- CORRUGATED STEEL PIPE SHALL HAVE TWO WELDED SEAMS WITH THE HELICAL CORRUGATIONS. EACH END OF THE HELICAL CORRUGATED PIPE SHALL BE RE-ROLLED TO AN ANNULAR CONFIGURATION TO ACCOMODATE THE WATERTIGHT COUPLING BAND DESCRIBED HEREIN. RIVETED OR LOCK SEAM PIPE IS UNACCEPTABLE.
- ALL PIPE CONNECTIONS TO THE SIDE WALL OF MAIN-LINE CORRUGATED STEEL PIPE SHALL BE OF THE DIAMETER SPECIFIED ON THE PLANS AND SHALL CONSIST OF SIMILAR STEEL PIPE THAT CONNECTS OR TAPS INTO THE MAIN-LINE PIPE WALL USING PREFABRICATED STEEL SADDLE PLATE.

2. REINFORCED CONCRETE PIPE:

- REINFORCED CONCRETE SEWER PIPE SHALL CONFORM TO THE CURRENT REQUIREMENTS OF ASTM DESIGNATION C76, CLASS IV, WALL B, FOR CIRCULAR PIPE AND ASTM DESIGNATION C506 FOR HORIZONTAL ELLIPTICAL PIPE.
- JOINTS SHALL CONFORM TO THE REQUIREMENTS OF ASTM DESIGNATION C443, USING MODIFIED GROOVED TONGUE WITH RUBBER GASKET, TONGUE AND GROOVE WITH RUBBER GASKET AND TONGUE AND GROOVE WITH COLD MASTIC JOINTS (DeWITT *10).
- THE INSIDE JOINTS OF PIPE SIZES OVER 27" DIAMETER SHALL BE POINTED UP WITH MORTAR UPON COMPLETION OF BACKFILLING OPERATIONS.
- ALL CATCH BASINS AND INLET LEADS WITHIN A STREET, INCLUDING THE LEAD TO MANHOLES SHALL BE C-76, CLASS IV MINIMUM.

3. POLYETHYLENE PIPE:

- PIPE AND COUPLINGS SHALL BE AS MODIFIED BY ADVANCED DRAINAGE SYSTEMS, INC. ADS N-12 PIPE OR APPROVED EQUAL.
- CORRUGATED POLYETHYLENE SEWER PIPE WITH AN INTEGRALLY FORMED SMOOTH INTERIOR SHALL CONFORM TO AASHTO DESIGNATION M-294 FOR TEST METHODS, DIMENSIONS AND MARKINGS.
- PIPE AND COUPLINGS SHALL BE MADE OF PLOYETHYLENE COMPOUNDS WHICH CONFORM WITH THE PHYSICAL REQUIREMETNS OF TYPE III, CATEGORY 3, 4 OR 5, P23, P33 OR P34, CLASS C AS DEFINED IN ASTM DESIGNATION 1248.
- JOINT COUPLINGS SHALL BE CORRUGATED TO MATCH THE PIPE CORRUGATIONS AND WIDTH SHALL NOT BE LESS THAN½THE DIAMETER.
- SPLIT COUPLINGS SHALL BE MANUFACTURED TO ENGAGE AN EQUAL NUMBER OF CORRUGATIONS ON EACH SIDE OF THE PIPE JOINT.

4. POLYVINYL CHLORIDE (PVC) PIPE:

- PVC STORM SEWER PIPE SHALL CONFORM TO THE REQUIREMENTS OF ANSI/ASTM DESIGNATION 3034 TYPE PSM.
- PVC STORM SEWER PIPE SHALL HAVE A BELL AND SPIGOT WITH RUBBER RING SEALED GASKETS.

SUMP PUMP LEAD NOTES

1. ALL SUMP PUMP LEADS CONNECTED TO A DRAIN SHALL BE PRE-MANUFACTURED.
2. SUMP PUMP MAINS AND LEADS SHALL BE SDR 26, NONPERFORATED, SOLID WALL, PVC, WITH PREMIUM JOINTS.
3. ENDS OF ALL 4" SUMP PUMP LEADS SHALL BE TEMPORARILY CAPPED AND THEIR LOCATION STAKED, WITNESSED AND RECORDED.
4. ALL SUMP PUMP LEADS TO BE TAKEN TO THE PROPERTY LINE, EASEMENT LINE OR AS INDICATED ON THE PLAN.
5. SUMP PUMP CLEANOUTS SHALL BE A MINIMUM INSIDE DIAMETER OF 24" AND BE CONSTRUCTED AT CHANGES OF ALLIGNMENT, ENDS OF SUMP PUMP MAINS OR AS INDICATED ON THE PLANS.

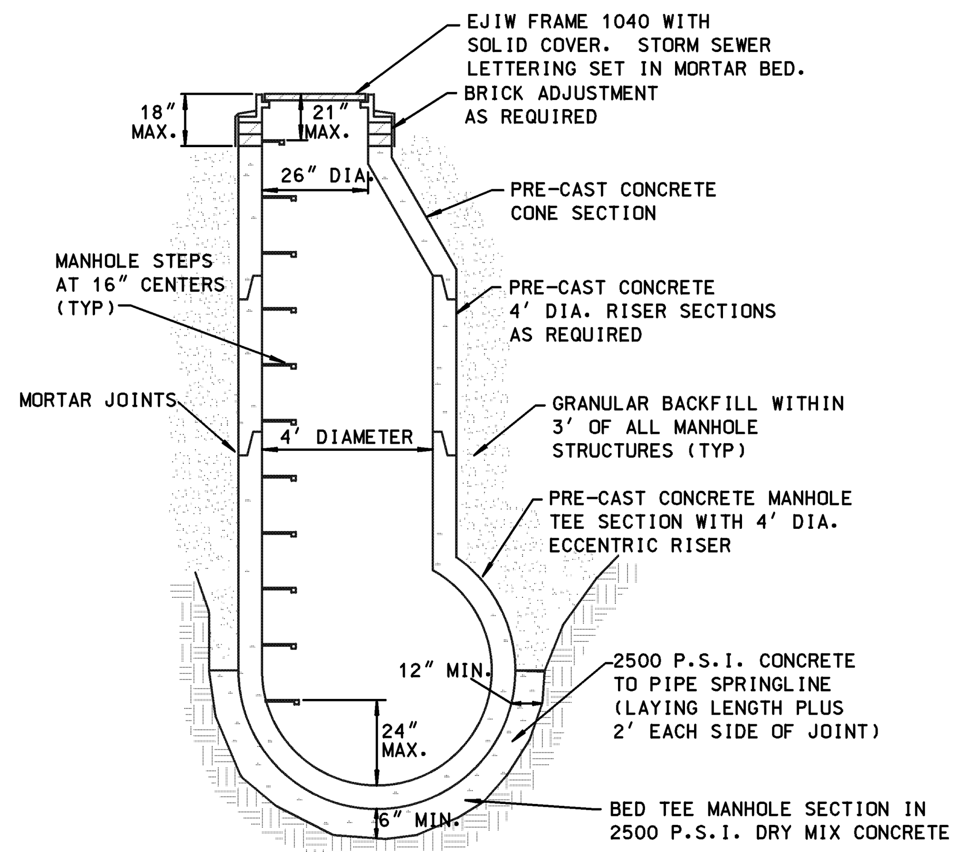

PRE-CAST TEE MANHOLE DETAIL
NO SCALE

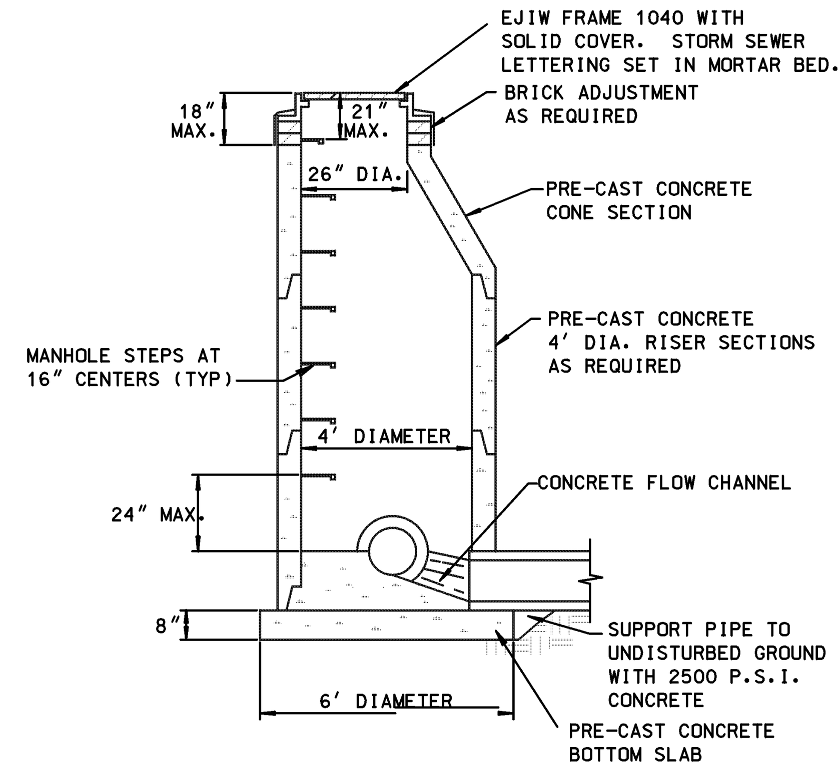

STANDARD PRE-CAST MANHOLE DETAIL
NO SCALE

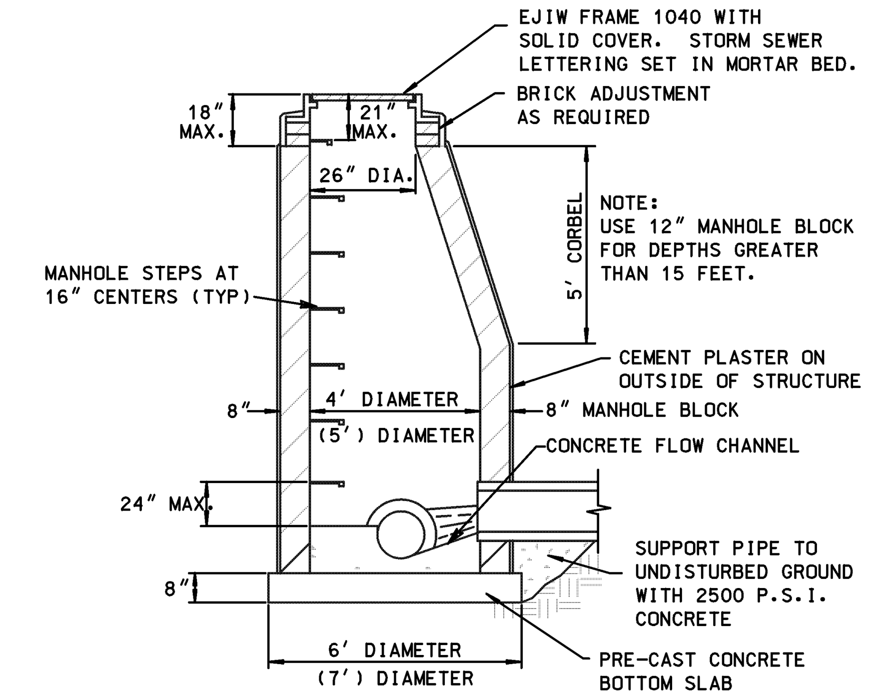

STANDARD BLOCK MANHOLE DETAIL
NO SCALE

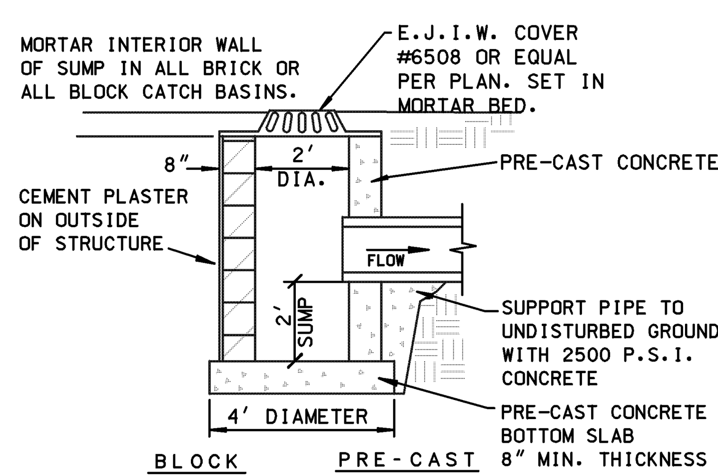

REAR YARD
CATCH BASIN DETAIL
NO SCALE

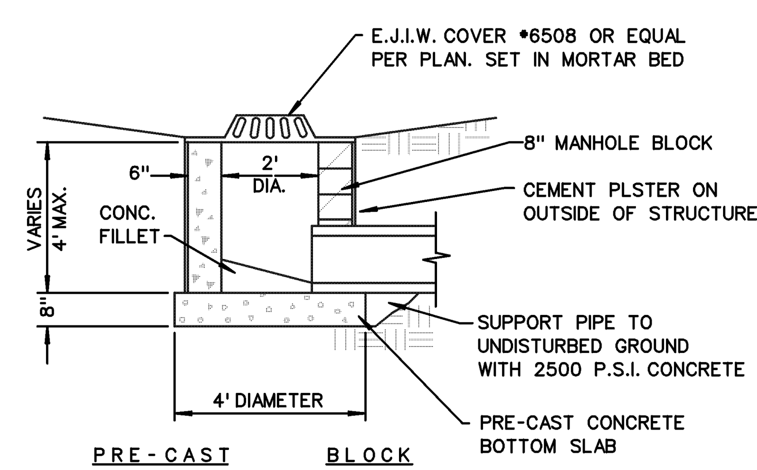

INLET DETAIL
NO SCALE

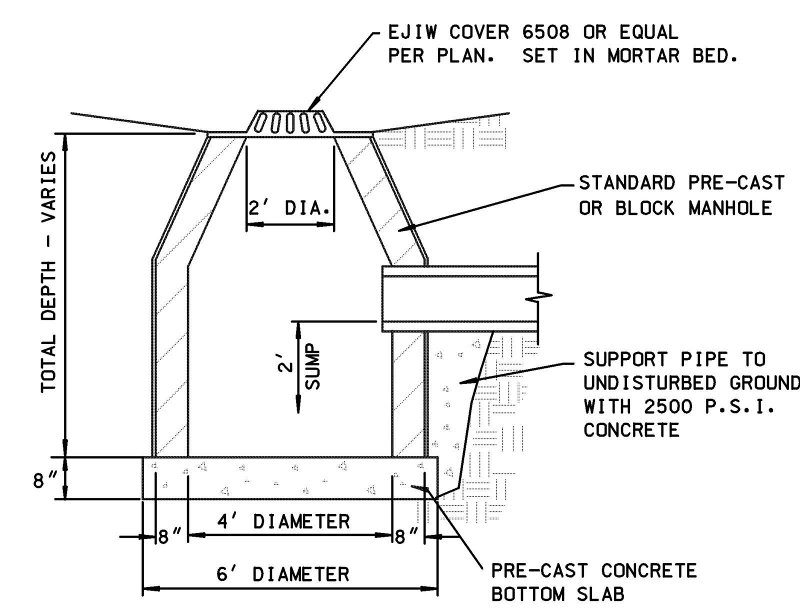

CATCH BASIN IN SODDED
AREA DETAIL
NO SCALE

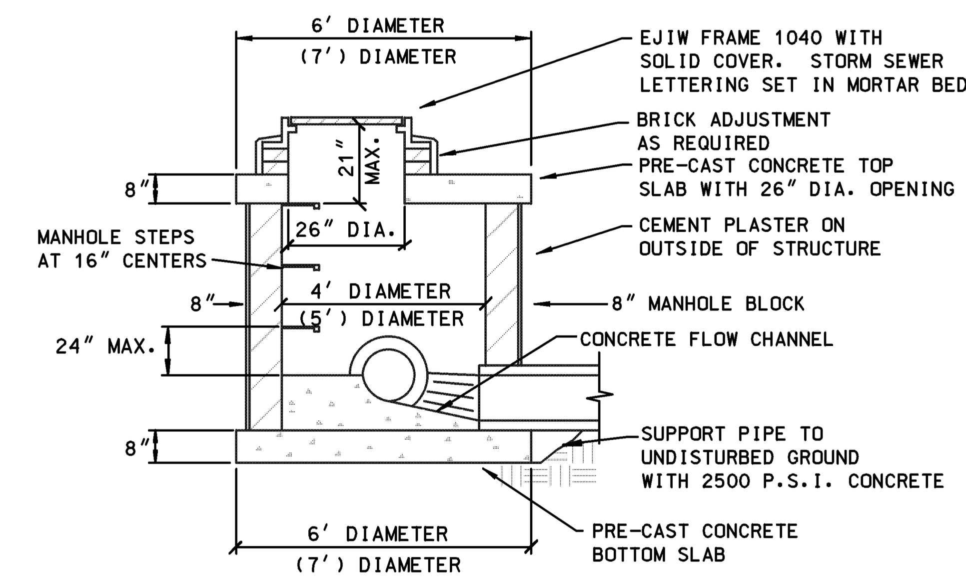

LOWHEAD MANHOLE DETAIL
NO SCALE

STORM DRAIN
RECORD DRAWING SPECIFICATIONS

1. Record drawings shall be submitted for final acceptance of the storm drain system.

2. Record drawings shall be submitted by the design engineer and contain the following information:

- The design engineer shall furnish "record drawings" storm sewer plans upon job completeion.
- Record drawings shall be provided on three (3) mil. mylar. Xerox or any other heat process reproductions will not be accepted.
- Along with the mylar plan set, provide two (2) sets of blueprints produced from the mylars and the plans on electronic media AutoCAD format (latest version).
- Each and every sheet shall be sealed by the project engineer, along with the following certification statement on the cover:

I HEREBY CERTIFY THAT OUR FIRM HAS PREPARED THESE RECORD DRAWINGS OF THE IMPROVEMENTS AS CONSTRUCTED, AND THAT TO THE BEST OF MY KNOWLEDGE THOSE IMPROVEMENTS NOTED AS "RECORD DRAWINGS" WERE CONSTRUCTED IN SUBSTANTIAL CONFORMANCE WITH THE APPROVED CONSTRUCTION PLANS; AND ALSO THAT THE STORM SEWER AND STRUCTURES, AS CONSTRUCTED, LIE WITHIN THE EASEMENT DESCRIPTIONS REQUIRED BY LYON TOWNSHIP.

____
(COMPANY NAME)

____
(ENGINEER'S SIGNATURE)

PROFESSIONAL ENGINEER NO. __________

ENGINEER SEAL

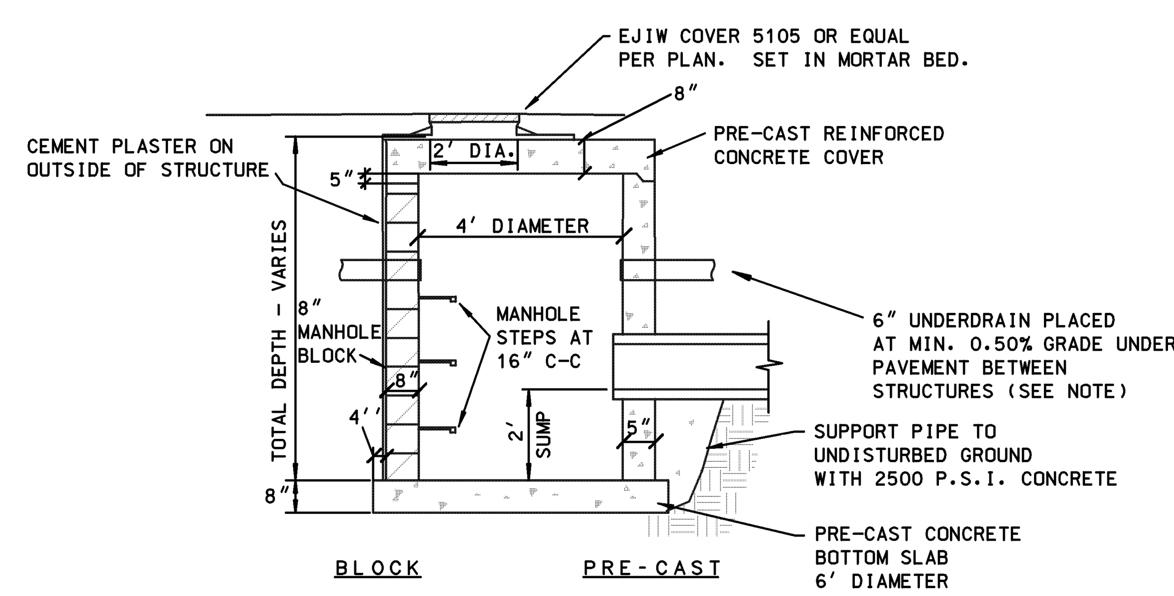

CATCH BASIN WITH SLAB COVER DETAIL
NO SCALE

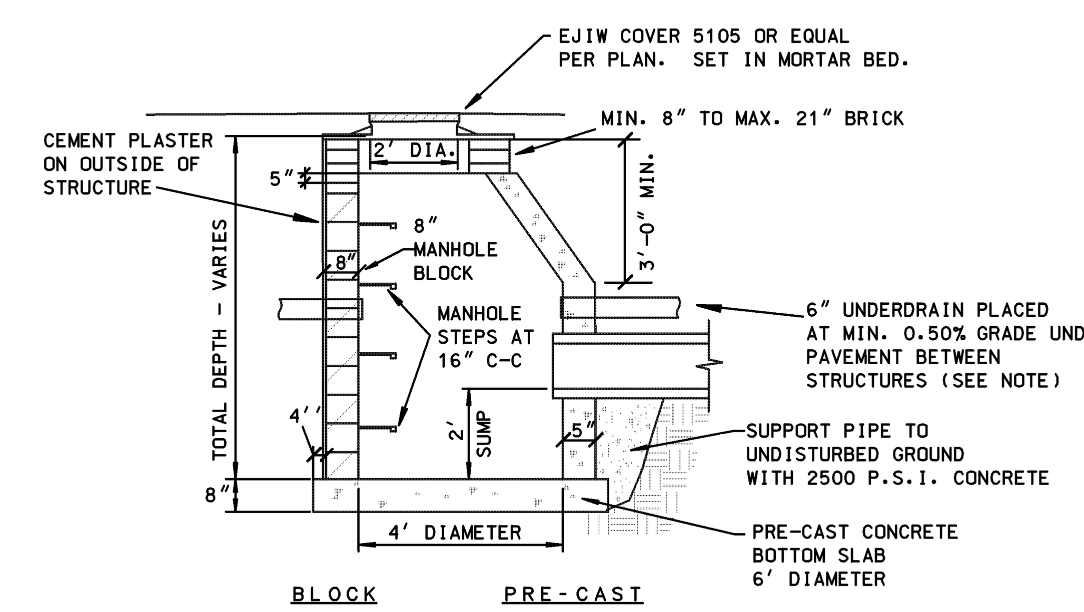

STANDARD CATCH BASIN IN
PAVEMENT DETAIL
NO SCALE

DATE:	REVISIONS:
6/19/03	DETAILS FINALIZED

72 HOURS (3 WORKING DAYS) BEFORE YOU DIG CALL MISS DIG 800-482-7171 (TOLL FREE)

PRINCIPAL: LDC
PROJ. MNGR: TAB
DESIGN: GWE
DRAWN: GWE
IND. REVIEW: GWE

CHARTER TOWNSHIP OF LYON
LYON MUNICIPAL CENTER
58000 GRAND RIVER AVENUE
NEW HUDSON, MI 48165
(248)437-2240

Giffels-Webster Engineers, Inc.
ENGINEERS LAND SURVEYORS PLANNERS LANDSCAPE ARCHITECTS
2871 BOND STREET ROCHESTER HILLS, MI 48309
(248) 852-3100

Terms and Conditions for Electronic Data:
This document is provided in electronic format for the referenced project. It is understood and agreed that any use or reuse of original or altered files will be at the user's own risk and legal responsibility. It is also agreed that the electronic files provided by Giffels-Webster Engineers, Inc. (GWE) are being provided for general information purposes only. Neither the electronic files nor any CAD versions are to be relied on for construction layout purposes.
The user expressly indemnifies and holds GWE harmless for any and all claims, suits, liability, demands or other costs arising out of or resulting from the unauthorized use of these materials. GWE makes no representation as to the accuracy of the information provided by the electronic media. Data on electronic media can deteriorate or be modified without the knowledge of GWE.
Electronic media viruses are increasing in complexity and growth. GWE advises all users to scan any disc received from outside sources with a current anti-virus program. It is understood and agreed that GWE will not be responsible for any damage caused by such a virus. If any virus is detected by your system on any media received from GWE it is your responsibility to contact us immediately.

SHEET TITLE:
STORM DRAIN: STANDARD NOTES & DETAILS
LYON TOWNSHIP, OAKLAND CO., MI

DATE: 1/21/02
SCALE: AS NOTED
SHEET: ST-1
JOB:

Copyright © 2003 Giffels-Webster Engineers, Inc.
No reproduction shall be made without the prior written consent of Giffels-Webster Engineers, Inc.