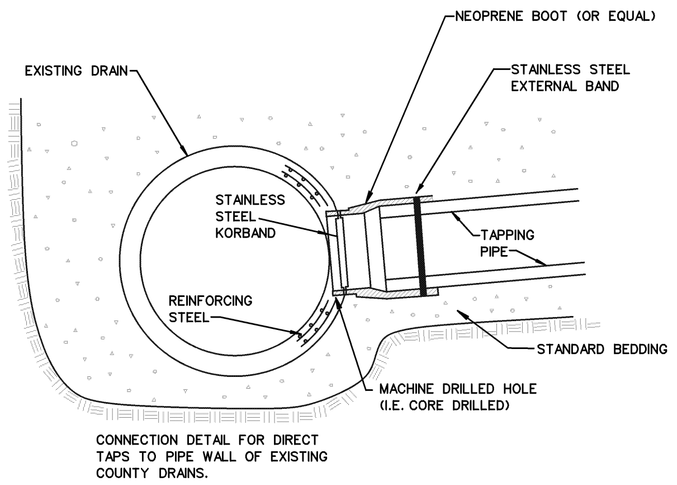


## KOR-N-TEE TAP DETAIL
NO SCALE

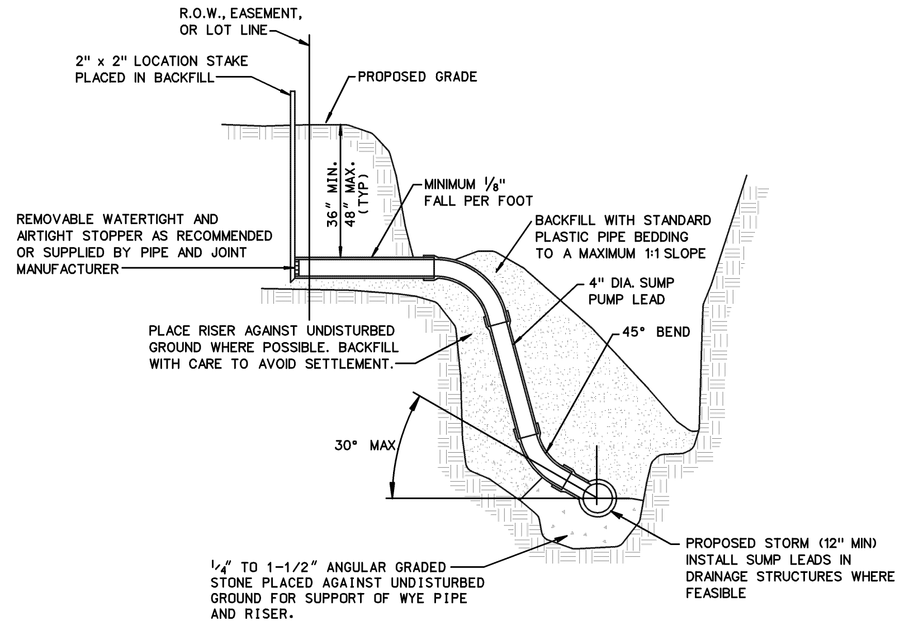


## HOUSE LEAD DETAIL FOR 4" DIAMETER PLASTIC SUMP PUMP LEADS
NO SCALE

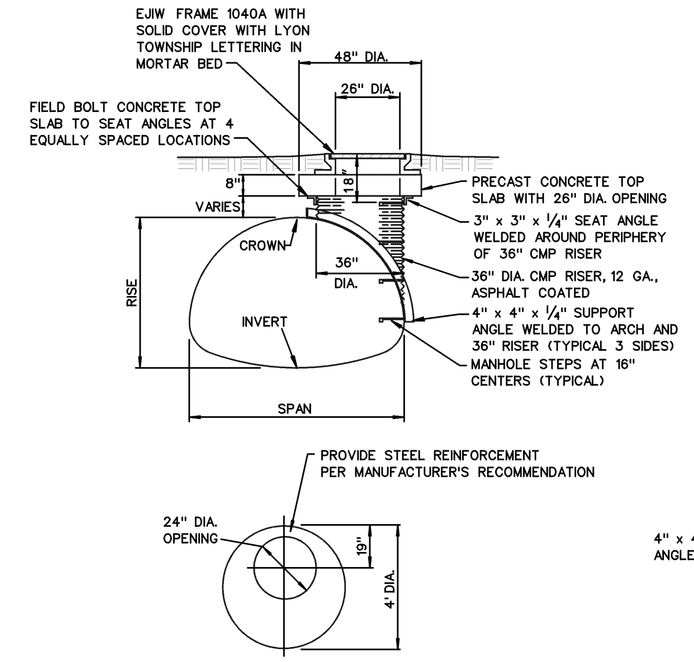


## CMP ARCH MANHOLE DETAILS
NO SCALE

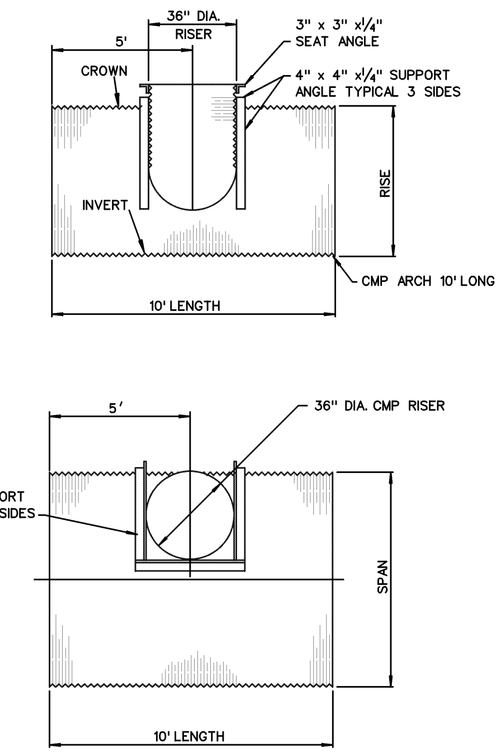


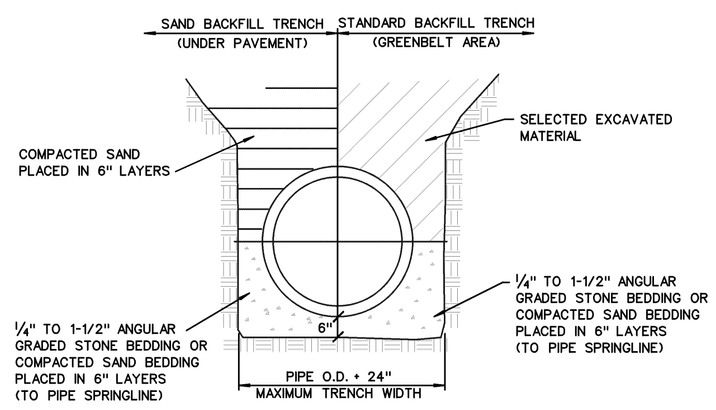


## CLASS "B" BEDDING TRENCH DETAIL FOR PIPE 27" DIAMETER AND LARGER
NO SCALE

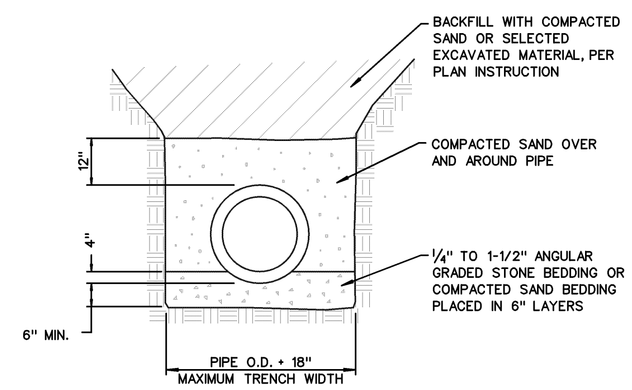


## CLASS "B" BEDDING TRENCH DETAIL FOR PIPE 24" DIAMETER AND SMALLER
NO SCALE

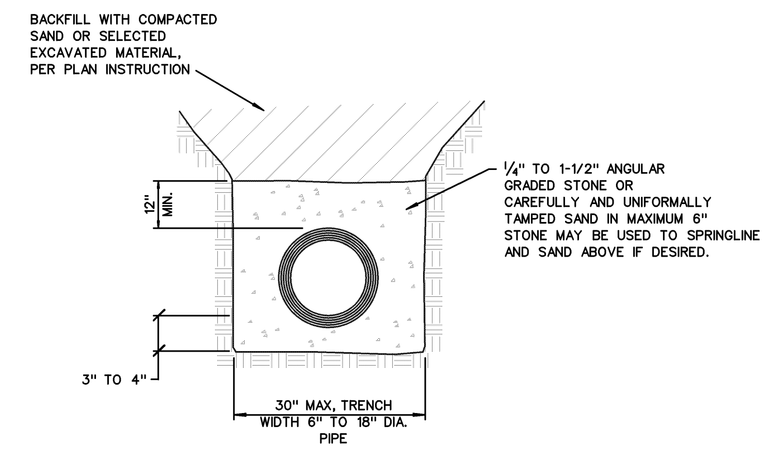


## PVC SOLID WALL BEDDING DETAIL
NO SCALE

*IN DRY, STABLE SOILS, PEASTONE (EQUIVALENT TO M.D.O.T. 34R SPECIFICATIONS) MAY BE SUBSTITUTED FOR THE STANDARD BEDDING INDICATED BELOW. IF TRENCH IS WET OR UNSTABLE A GEOTEXTILE FABRIC MUST BE USED TO LINE THE TRENCH PRIOR TO THE PLACEMENT OF THE PEASTONE.

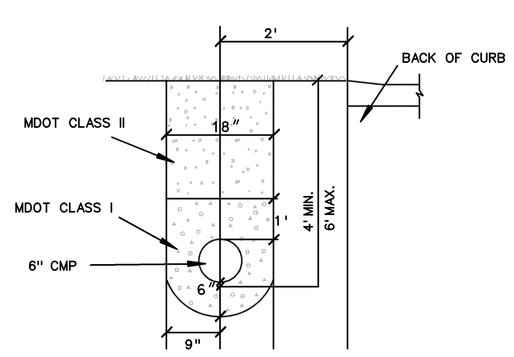


## EDGEDRAIN DETAIL
NO SCALE

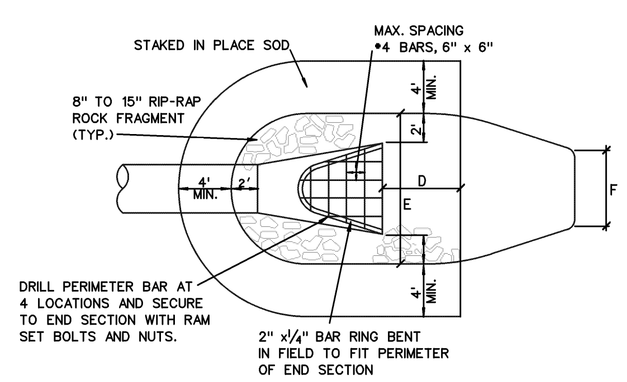


STONE RIP RAP

| PIPE DIAMETER | D | E | F | SQUARE YARDS |
|---|---|---|---|---|
| 12" | 5' | 6'-6" | 3' | 4 |
| 15" | 5' | 7' | 3' | 4 |
| 18" | 5' | 7'-6" | 3'-6" | 4 |
| 21" | 5'-6" | 8' | 4' | 5 |
| 24" | 6' | 8'-6" | 4'-6" | 6 |
| 27" | 6'-6" | 9' | 5' | 7 |
| 30" | 7' | 9'-9" | 5'-6" | 8 |
| 33" | 7'-6" | 10'-3" | 5'-6" | 9 |
| 36" | 8' | 10'-9" | 6' | 10 |
| 42" | 9' | 11'-9" | 6'-6" | 12 |
| 48" | 10' | 13' | 7' | 14 |

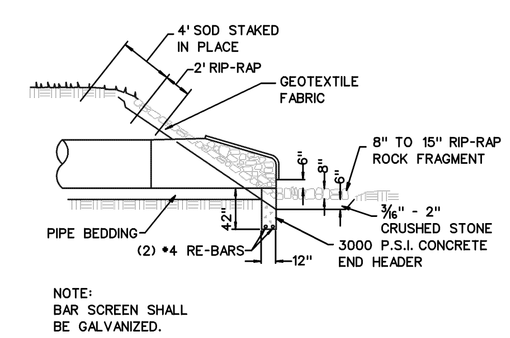


## END SECTION, RIP RAP & BAR SCREEN DETAILS
NO SCALE

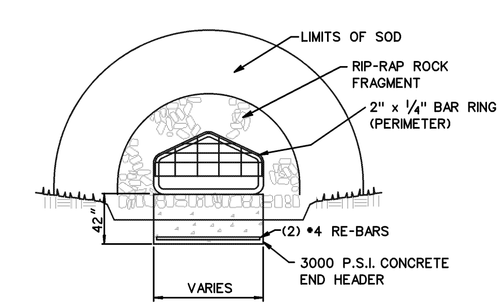


| DATE: | REVISIONS: |
|---|---|
| 6/19/03 | DETAILS FINALIZED |

72 HOURS (3 WORKING DAYS) BEFORE YOU DIG CALL MISS DIG 800-482-7171 (TOLL FREE)

PRINCIPAL: LDC
PROJ. MNGR: TAB
DESIGN: GWE
DRAWN: GWE
IND. REVIEW: GWE

CHARTER TOWNSHIP OF LYON
LYON MUNICIPAL CENTER
58000 GRAND RIVER AVENUE
NEW HUDSON, MI 48165
(248)437-2240

Giffels-Webster Engineers, Inc.
ENGINEERS LAND SURVEYORS PLANNERS LANDSCAPE ARCHITECTS
2871 BOND STREET ROCHESTER HILLS, MI 48309
(248) 852-3100

Terms and Conditions for Electronic Data:
This document is provided in electronic format for the referenced project. It is intended for use as a reference only and shall not be used for any other purpose or at other sites or for other projects without the express written consent of Giffels-Webster Engineers. It is also agreed that the electronic files provided by Giffels-Webster Engineers, Inc. (GWE) are being provided for convenience only and that the information contained in the electronic files or portions are to be relied on for construction layout purposes.
The recipient agrees to indemnify and hold harmless Giffels-Webster Engineers, Inc. and all officers, agents, and employees from and against all claims, suits, liability, demands or other costs arising out of or resulting from the reproduction, modification, distribution or use of the electronic data provided by GWE. In the event of such a dispute, the electronic data shall be deemed to be the accuracy of the information provided by the electronic media. Data on electronic media varies in accuracy in completeness and graphic quality. GWE advises all users to verify all information contained on the electronic media against the printed plans. Electronic media errors are inevitable in complex and graphic CAD, advises all users to verify all information contained on the electronic media against the printed plans. GWE assumes no responsibility for any damage caused by such a error. If any error is detected by your system, or any other system, please call GWE at the number above so the error can be corrected. GWE is not responsible for any damage caused by such a error. If any error is detected by your system, or any other system, please call GWE at the number above so the error can be corrected. GWE is not responsible for any damage caused by such a error.

SHEET TITLE:
STORM DRAIN
STANDARD DETAILS
LYON TOWNSHIP, OAKLAND CO., MI

DATE: 1/21/02
SCALE: AS NOTED
SHEET: ST-2
JOB:

Copyright © 2003 Giffels-Webster Engineers, Inc.
No reproduction shall be made without the prior written consent of Giffels-Webster Engineers, Inc.