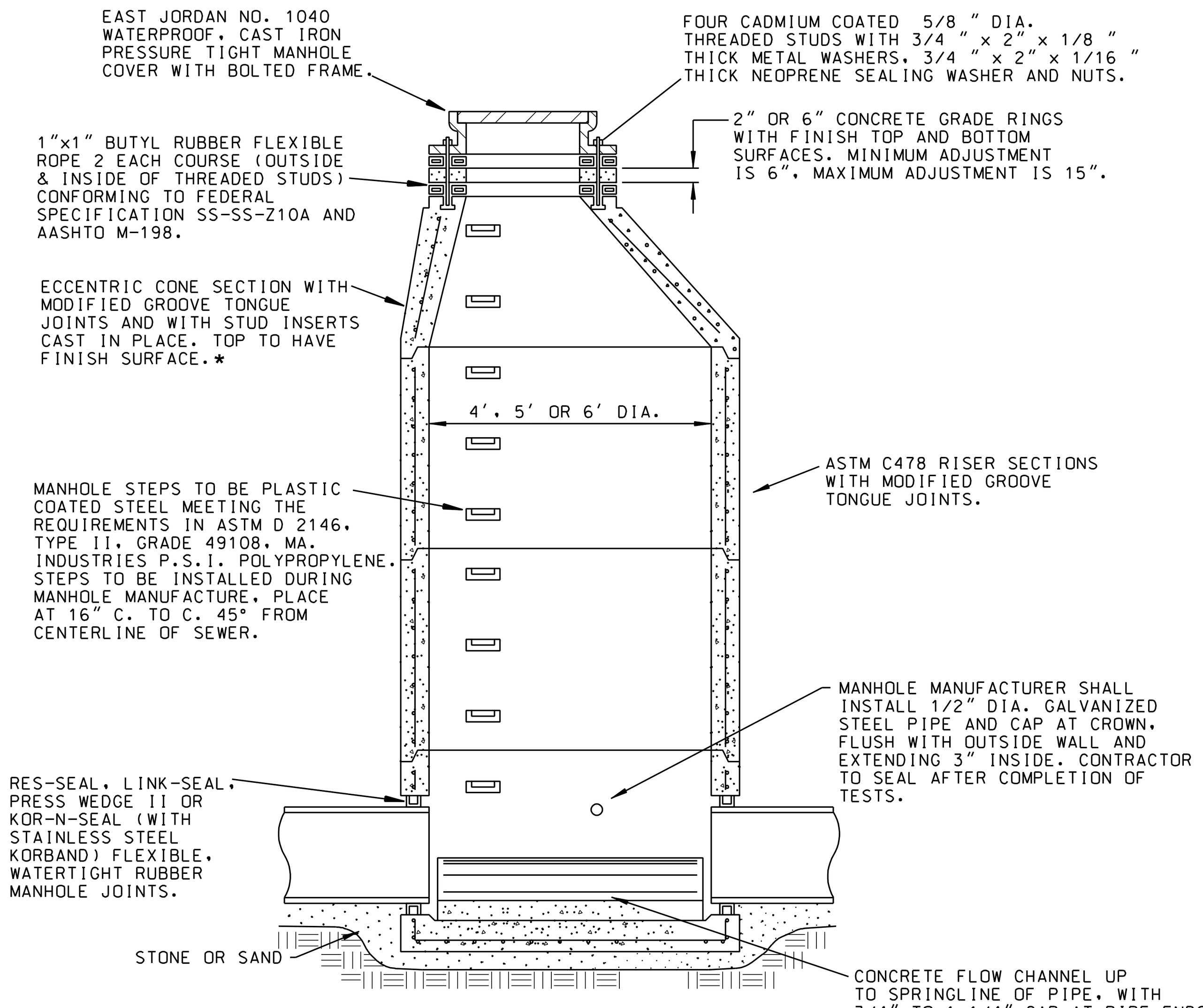

STANDARD MANHOLE

NO SCALE

*SEE DETAIL FOR MANHOLE TOPS WITHIN PAVEMENT AREAS FOR MANHOLE TOPS CONSTRUCTED IN PAVEMENT AREAS.

SEWER SIZE	MH DIA.
8" THRU 21"	4'
24" THRU 36"	5'
38" THRU 42"	6'

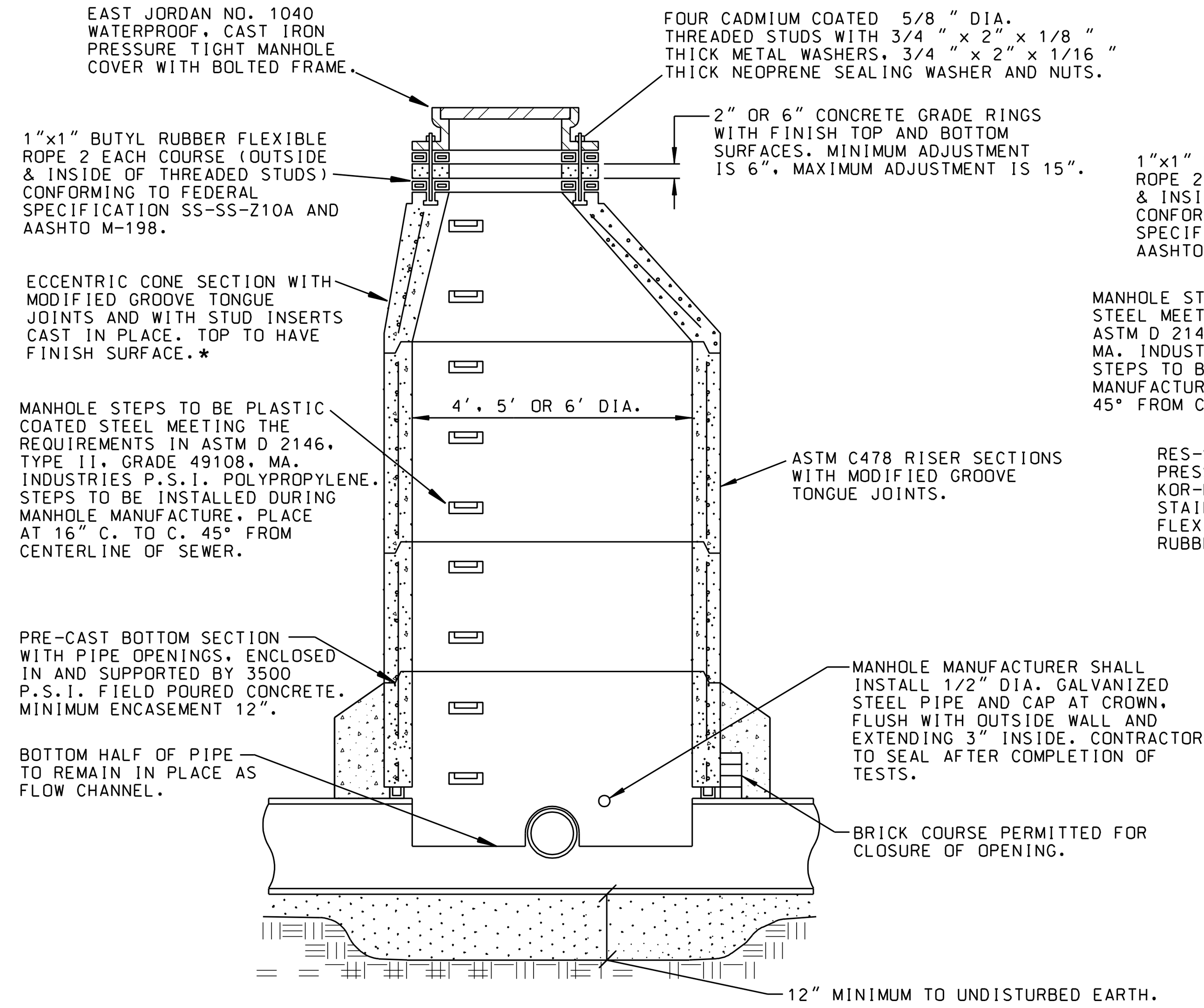

SKETCH OF MINIMUM MANHOLE REQUIREMENTS ON MANHOLES CONSTRUCTED OVER EXISTING SEWERS

FOR
LOCAL SANITARY SEWER EXTENSIONS
CONNECTING DIRECTLY TO
AN EXISTING SANITARY SEWER SYSTEM
NOT TO SCALE

SEE DETAIL FOR MANHOLE TOPS WITHIN PAVEMENT AREAS FOR MANHOLE TOPS CONSTRUCTED IN PAVEMENT AREAS.

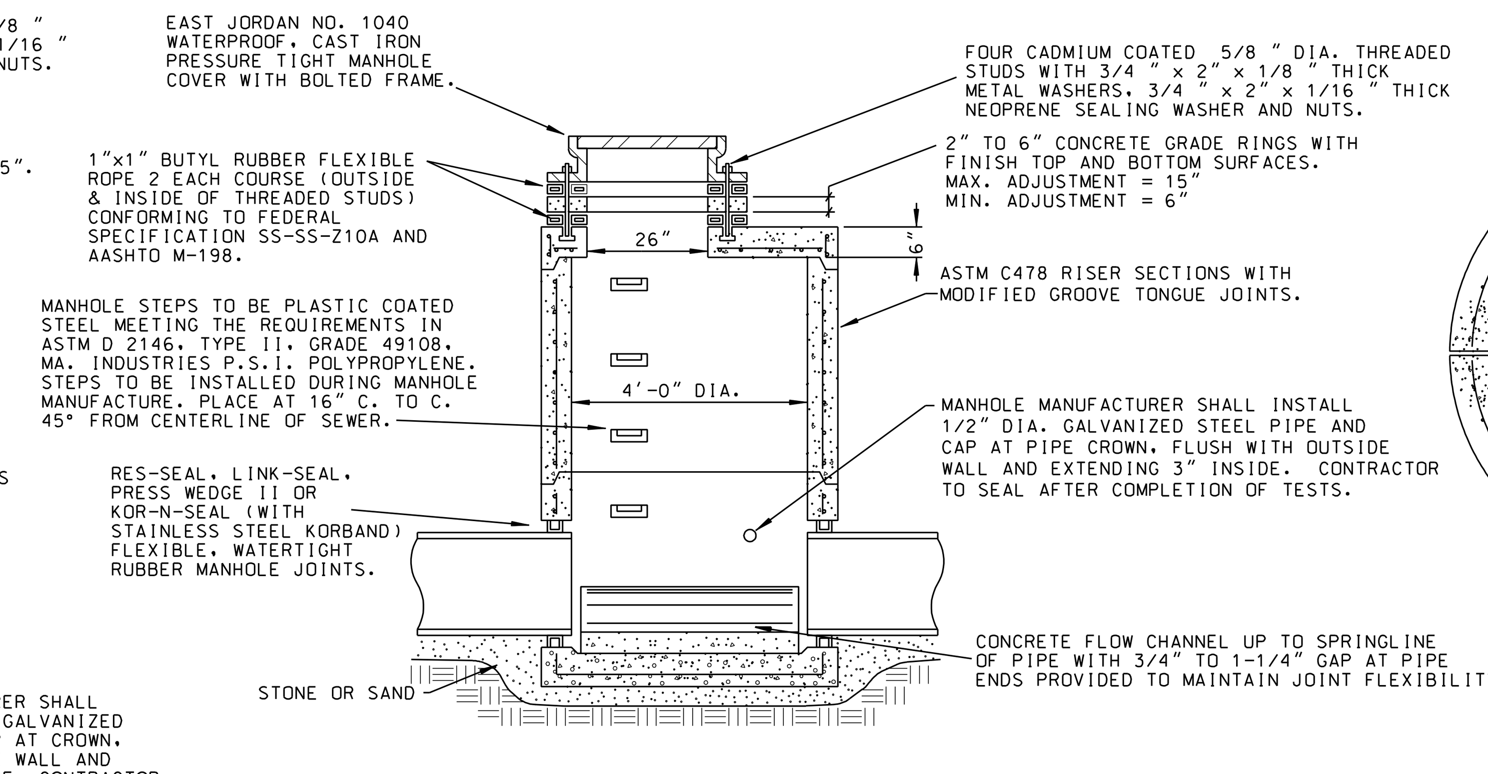

FLAT TOP MANHOLE FOR SHALLOW MANHOLE INSTALLATIONS

ON 6" THRU 21" SEWER

NO SCALE

FOR MANHOLE TOPS WITHIN PAVEMENT AREAS SEE DETAIL FOR MANHOLE TOPS CONSTRUCTED IN PAVEMENT AREAS.

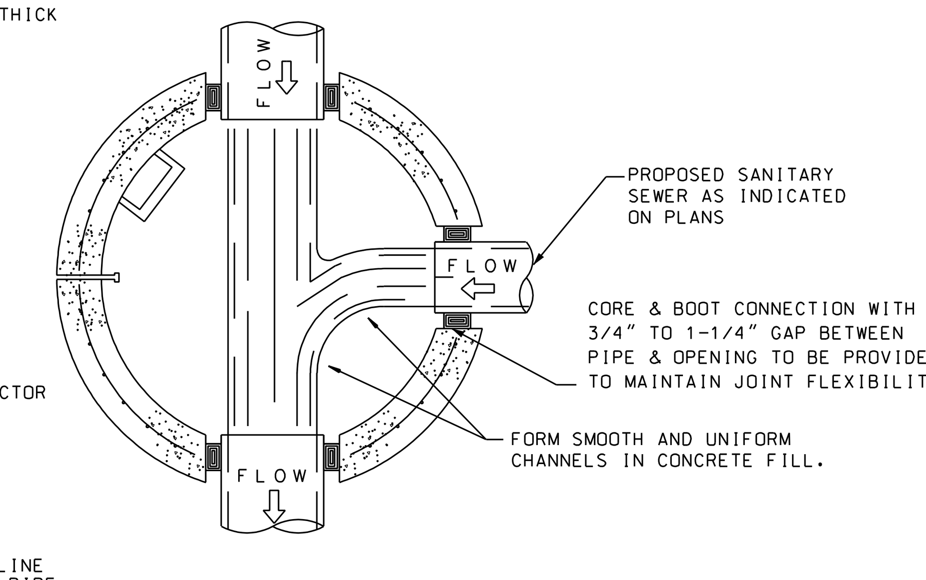

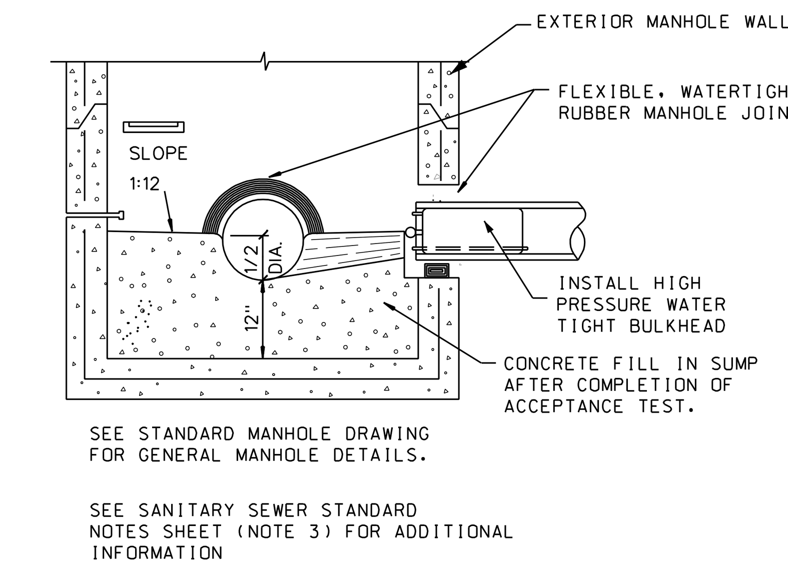

SEE STANDARD MANHOLE DRAWING FOR GENERAL MANHOLE DETAILS.

SEE SANITARY SEWER STANDARD NOTES SHEET (NOTE 3) FOR ADDITIONAL INFORMATION

SUMP MANHOLE FOR TESTING, CLEANING AND DEWATERING

NO SCALE

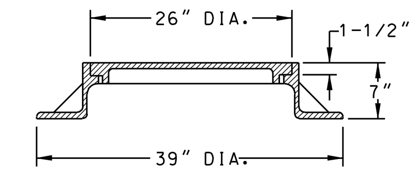

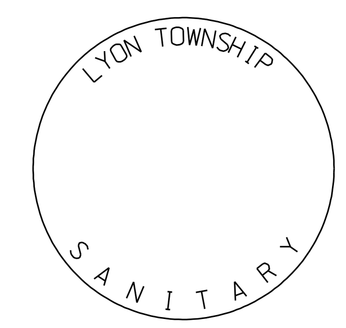

LETTERING LAYOUT FOR MANHOLE COVER

NO SCALE

EAST JORDAN IRON WORKS HEAVY DUTY MATERIAL,
ASTM A48 CL. 35, CATALOG NO. 1040A.

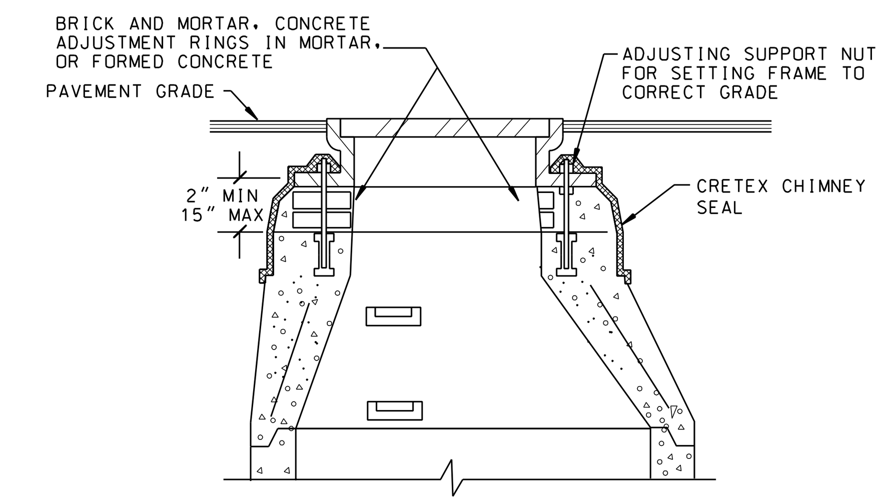

CONSTRUCTION DETAILS FOR MANHOLE TOPS WITHIN PAVEMENT AREAS

NO SCALE

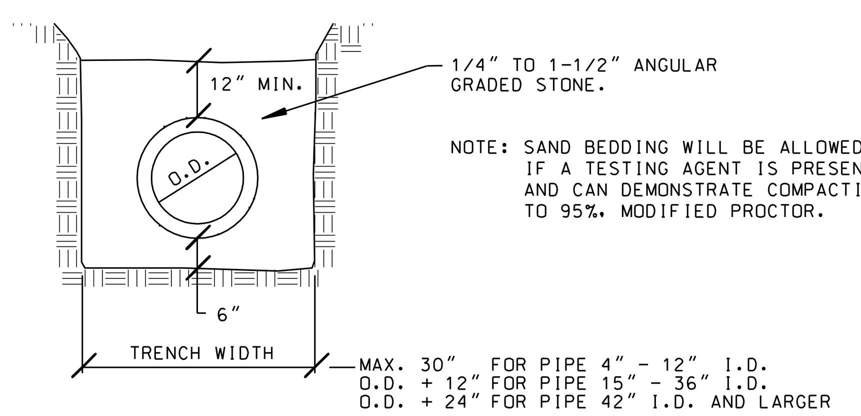

STANDARD BEDDING (CLASS B)

NO SCALE

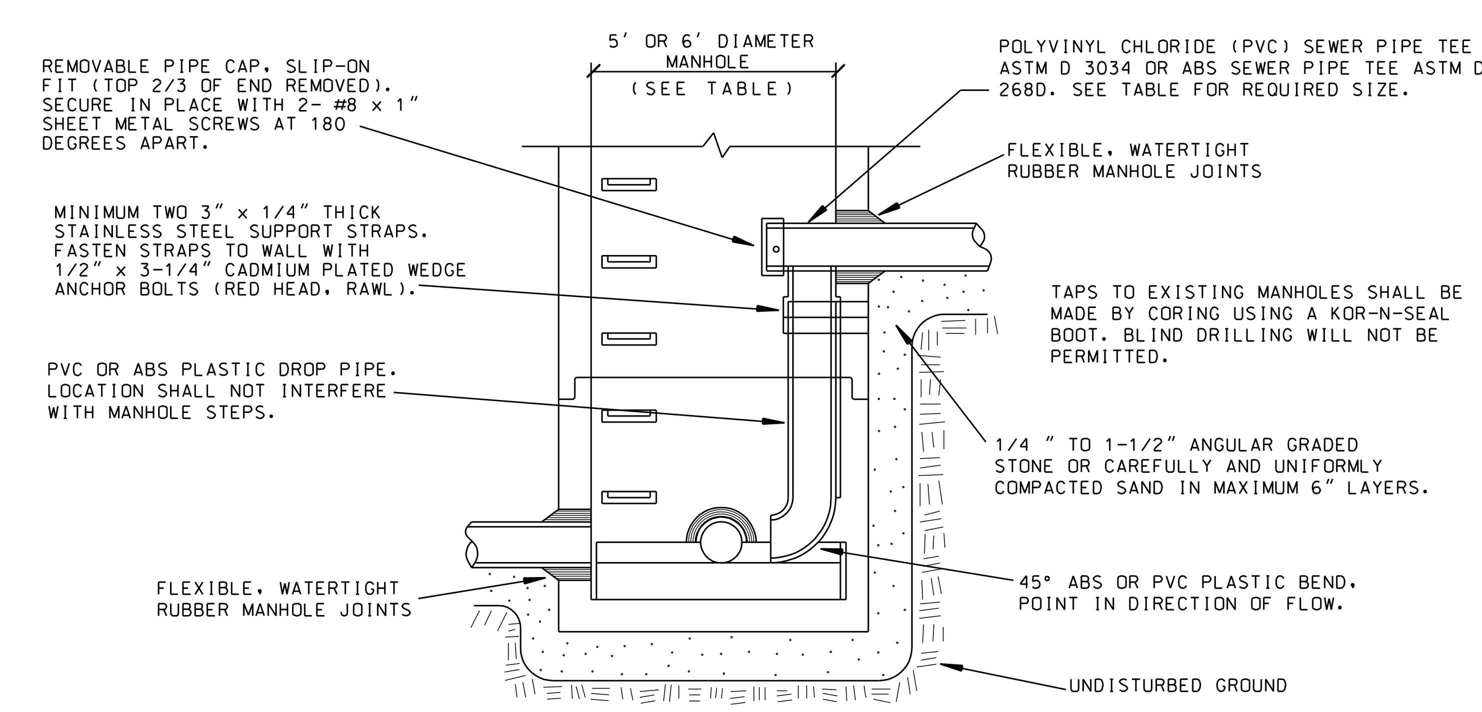

STANDARD INTERNAL DROP MANHOLE CONNECTION

SEE STANDARD MANHOLE DRAWING FOR GENERAL MANHOLE DETAILS.

NO SCALE

SEWER SIZE	DROP SIZE	MH DIA.
UP TO 10"	8"	5'
UP TO 18"	10"	5'
UP TO 30"	18"	6'
UP TO 42"	24"	6'

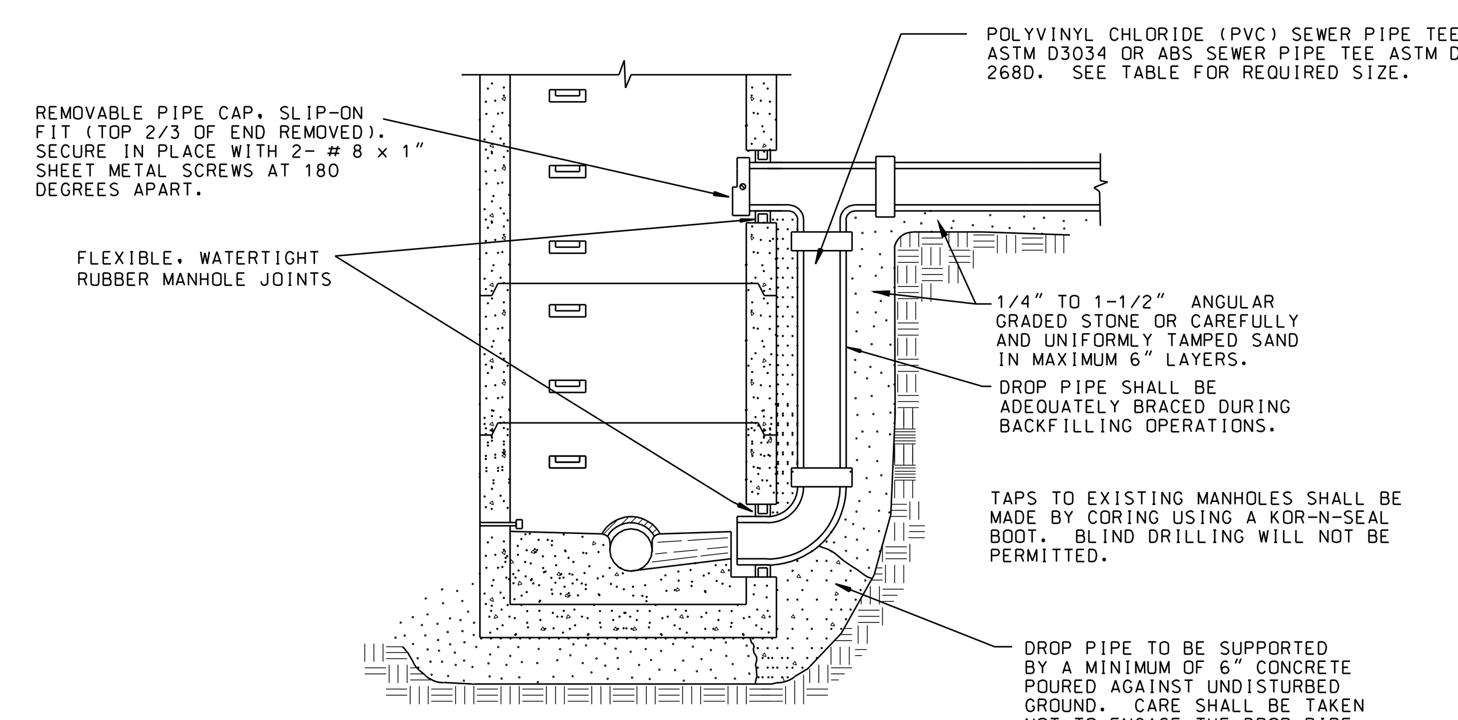

STANDARD EXTERIOR DROP MANHOLE CONNECTION

SEE STANDARD MANHOLE DRAWING FOR GENERAL MANHOLE DETAILS.

NO SCALE

NATIONAL PIPE SIZE-STRAIGHT THROUGH SECTION

SEWER SIZE	DROP SIZE	MH DIA.
UP TO 10"	8"	4'
UP TO 18"	10"	4'
UP TO 30"	18"	5'

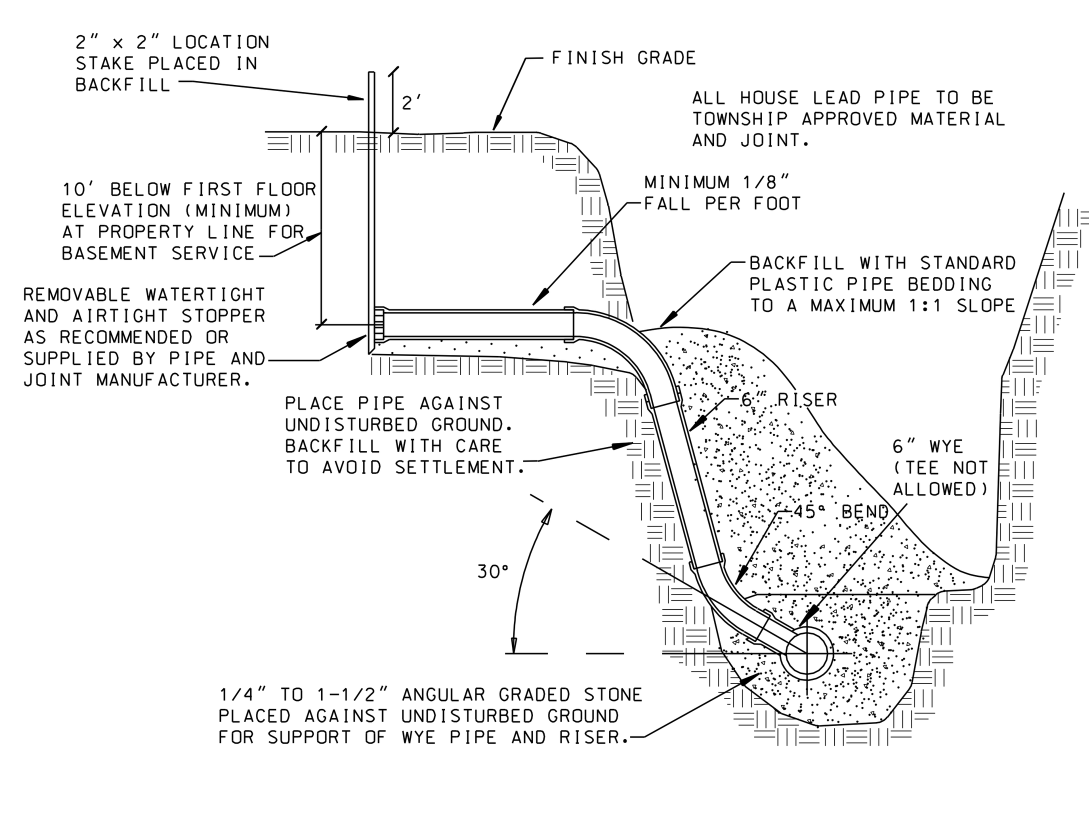

HOUSE LEAD DETAIL

NO SCALE

DATE:	REVISIONS:
2/4/03	DETAILS FINALIZED
10/01/03	DETAILS REVISED
06/20/06	DETAILS REVISED

72 HOURS (3 WORKING DAYS) BEFORE YOU DIG CALL MISS DIG 800-482-7171 (TOLL FREE)

PRINCIPAL: LDC
PROJ. MNGR: TAB
DESIGN: GWE
DRAWN: GWE
IND. REVIEW: GWE

CHARTER TOWNSHIP OF LYON
LYON MUNICIPAL CENTER
58000 GRAND RIVER AVENUE
NEW HUDSON, MI 48165
(248)437-2240

Giffels-Webster Engineers, Inc.
ENGINEERS LAND SURVEYORS PLANNERS LANDSCAPE ARCHITECTS
2871 BOND STREET ROCHESTER HILLS, MI 48309
(248) 852-3100

Terms and Conditions for Electronic Data:
This document is provided in electronic format for the referenced project. It is understood and agreed that any use or reuse of original or altered files will be at the user's own risk and legal responsibility. It is also agreed that the electronic files provided by Giffels-Webster Engineers, Inc. (GWE) are being provided for general information purposes only. Neither the electronic files nor any CAD versions are to be relied on for construction layout purposes.
The user expressly indemnifies and holds GWE harmless for any and all claims, suits, liability, demands or other costs arising out of or resulting from the unauthorized use of these materials. GWE makes no representation as to the accuracy of the information provided by the electronic media. Data on electronic media can deteriorate or be modified without the knowledge of GWE.
Electronic media viruses are increasing in complexity and growth. GWE advises all users to scan any disc received from outside sources with a current anti-virus program. It is understood and agreed that GWE will not be responsible for any damage caused by such a virus. If any virus is detected by your system on any media received from GWE it is your responsibility to contact us immediately.

SHEET TITLE:

GRAVITY SEWER DETAILS

LYON TOWNSHIP, OAKLAND CO., MI

DATE: 3/11/02
SCALE: AS NOTED
SHEET: SA-2
JOB:

Copyright © 2003 Giffels-Webster Engineers, Inc. No reproduction shall be made without the prior written consent of Giffels-Webster Engineers, Inc.